Back

FURUNO

OPERATOR'S MANUAL

NAVTEX RECEIVER

MODEL NX-300

FURUNO ELECTRIC CO., LTD.
NISHINOMIYA, JAPAN

PRINTED IN JAPAN

© FURUNO ELECTRIC CO., LTD.

9-52, Ashihara-cho,
Nishinomiya, Japan

Telephone: 0798-65-2111
Telefax: 0798-65-4200

•Your Local Agent/Dealer

All rights reserved. Printed in Japan

FIRST EDITION : MAR. 2000
F : MAY 25,2001

PUB. No. OME-56290
NX-300
(TATA)

00080900000

⚠ SAFETY INSTRUCTIONS

Safety Instructions for the Operator

⚠ WARNING

Do not open the cover of the equipment.

Only qualified personnel should work inside the equipment.

Immediately turn off the power at the ship's mains switchboard if water or foreign object falls into the equipment or the equipment is emitting smoke or fire.

Continued use of the equipment can cause fire, electrical shock and serious injury.

Do not disassemble or modify the equipment.

Fire, electrical shock or serious injury can result.

⚠ CAUTION

Keep heater away from equipment.

A heater can melt the equipment's power cord, which can cause fire or electrical shock.

Use the proper fuse.

Use of the wrong fuse can cause fire or equipment damage.

Do not operate the equipment with wet hands.

Electrical shock can result.

Safety Instructions for the Installer

⚠ WARNING

Do not open the cover unless totally familiar with electrical circuits and service manual.

Improper handling can result in electrical shock.

Turn off the power at the ship's mains switchboard before beginning the installation. Post a warning sign near the switchboard to ensure that the power will not be applied while the equipment is being installed.

Serious injury or death can result if the power is not turned off, or is applied while the equipment is being installed.

⚠ CAUTION

Ground the equipment to prevent mutual interference.

Confirm that power supply voltage is compatible with the voltage rating of the equipment.

Connection to the wrong power supply can cause fire or equipment damage. The voltage rating appears on the label at the rear of the equipment.

Observe the following compass safe distances to prevent interference to a magnetic compass:

	Standard compass	Steering compass
NX-300	0.5 m	0.3 m

CONTENTS

FOREWORD ..... **v**

A Word to NX-300 Owners v

Features vi

SYSTEM CONFIGURATION ..... **vii**

EQUIPMENT LISTS ..... **viii**

1. PRINCIPLE OF NAVTEX SYSTEM **1-1**

1.1 How NAVTEX Works 1-1

1.2 NAVTEX System Operation 1-1

1.3 Message Format 1-2

1.4 Display Indications 1-3

1.5 NAVTEX Station Map 1-4

1.6 NAVTEX Station List 1-5

2. OPERATION **2-1**

2.1 Control Description 2-1

2.2 Turning the Power On/Off 2-1

2.3 Adjusting Dimmer and Contrast 2-2

2.4 Menu Operation Overview 2-2

2.5 Selecting Stations 2-3

2.6 Selecting Messages 2-4

2.7 Setting Functions (FUNCTIONS menu) 2-5

2.8 Selecting Language 2-9

2.9 Displaying Messages 2-9

2.10 Sample Messages 2-10

2.11 Displaying Navigation Data 2-11

2.12 Selecting Receive Frequency 2-12

3. SYSTEM MENU **3-1**

3.1 Units of Measurement 3-1

3.2 Time Difference (using local time) 3-2

3.3 Time Display 3-3

3.4 Default Setting 3-3

3.5 Delete All Messages....3-4
3.6 User Display of Navigation Data....3-4

4. OTHER FUNCTIONS 4-1

4.1 DEMO Mode....4-1
4.2 VIEW Mode....4-1
4.3 All Clear....4-1
4.4 Changing Received Message Log Window....4-2

5. MAINTENANCE & TROUBLESHOOTING.... 5-1

5.1 Maintenance....5-1
5.2 Diagnostic Test....5-1
5.3 When the Battery Icon Appears....5-2
5.4 Replacement of Fuse....5-3

6. INSTALLATION 6-1

6.1 Installation of Display Unit....6-1
6.2 Installation of Antenna Unit....6-2
6.3 Wiring....6-3
6.4 Interfacing....6-4

MENU TREE.... AP-1

SPECIFICATIONS SP-1

INDEX....index-1

Declaration of Conformity

FOREWORD

A Word to NX-300 Owners

Congratulations on your choice of the FURUNO NX-300 NAVTEX Receiver. We are confident that you will enjoy many years of operation with this fine piece of equipment.

For over 50 years FURUNO Electric Company has enjoyed an enviable reputation for quality and reliability throughout the world. Our extensive global network of agents and dealers furthers this dedication to excellence.

The NX-300 is just one of the many FURUNO developments in the field of marine radio communication. The NX-300 provides cost-effective price, high sensitivity and simple operation in one compact and light-weight unit. In addition to its fundamental function of receiving NAVTEX broadcasts, this unit can also function as nav data display when connected to navigation equipment.

This unit is designed and constructed to ensure the user many years of trouble-free operation. To obtain full performance from the equipment, however, you should carefully read and follow the recommended procedures for installation, operation and maintenance. No machine can perform its intended functions unless it is installed and maintained properly.

Thank you for considering and purchasing FURUNO equipment.

Features

NAVTEX (Navigational Telex) is a worldwide coastal telex broadcasting system. Coastal NAVTEX broadcasting stations with specific ID's transmit Navigational warnings, Meteorological warnings, Search and Rescue (SAR) information and other navigational information for NAVTEX receiver-equipped vessels sailing in coastal waters.

The FURUNO NX-300 NAVTEX receiver receives NAVTEX messages and automatically displays them together with station ID and message category information.

The service range of a NAVTEX station is typically 200-400 nautical miles. A NAVTEX station normally broadcasts every 4 hours.

The NAVTEX message is relevant for all types and sizes of vessels. The NX-300 is shipped from the factory equipped to receive 7 specific types of NAVTEX messages from all NAVTEX stations. However unnecessary stations can be rejected or necessary stations can be added by the "manual station selection" facility.

If ship's position data is fed from navigation equipment, the NX-300 automatically decides in which NAVAREA the vessel is navigating, and selects stations. (NAVAREAs are geographical zones defined by the International Maritime Organization.)

- Unattended operation once required data is entered.
- Received data is not saved nor displayed when the error rate exceeds the percentage you set (max 39%).
- No paper required
- Designed for small boats and fishing vessels
- Compact, stylish display and antenna units
- Memory of up to 28,000 characters for last 72 hours
- Navigation data can be fed through external input (connection with navigation aid required).
- Bright 95 x 60 mm LCD with adjustable contrast and brilliance
- Memory backup with a long-life lithium battery
- Low power consumption

SYSTEM CONFIGURATION

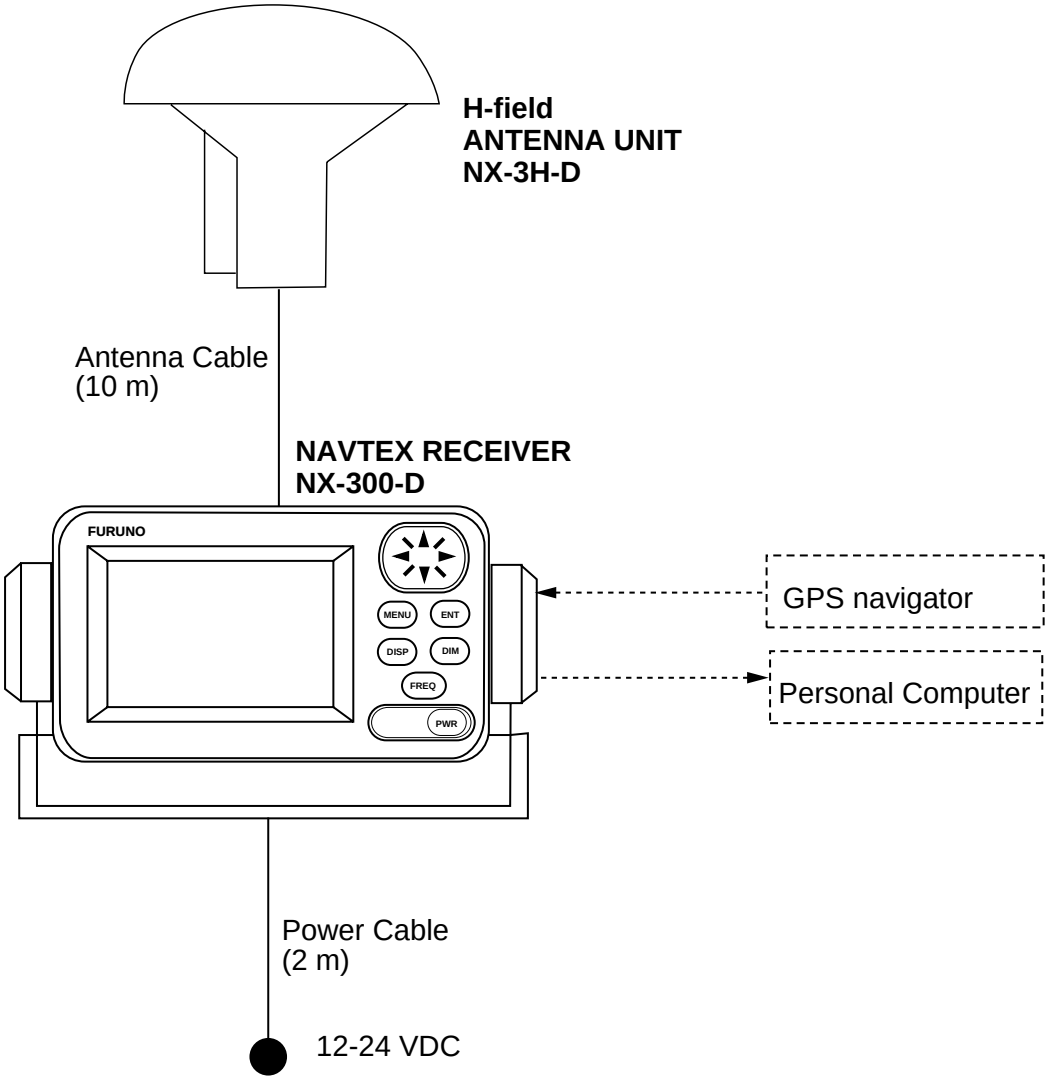

NX-300 System configuration

EQUIPMENT LISTS

Standard supply

Name	Type	Qty	Remarks
NAVTEX Reveiver	NX-300-D	1	Including hanger and knob bolts
Antenna Unit	NX-3H-D		H-field type with 10 m cable
Installation Materials		1 set	Power/Data cable (Type: MJ-A7SPF0005-020, Code No.: 000-139-384) Tapping screw (4 pcs., for fixing NAVTEX receiver, Type: 5x20, Code No.: 000-802-081)
Spare Parts		1 set	Fuse (2 pcs., Type: FGMB 1A, Code No.: 000-114-805)

Optional equipment

Name	Type	Code No.	Remarks
Right Angle Antenna Base	No. 13-QA330	000-803-239	For antenna unit
L-type Antenna Base	No. 13-QA310	000-803-240	
Handrail Antenna Base	No. 13-RC5160	000-806-114	
Mast Mount Kit	CP20-01111	004-365-780	
Flush Mount Kit S	OP-20-17	000-040-720	For flush mounting the NAVTEX receiver
Flush Mount Kit F	OP-20-29	000-041-405	

1. PRINCIPLE OF NAVTEX SYSTEM

1.1 How NAVTEX Works

There are many types of navigational and meteorological information available on radio, such as NAVAREA, HYDROPAC, etc. However, these systems rely heavily upon the operator's experience and skill in tuning the radio and interpreting messages. In addition, constant monitoring to pick up wanted information among a vast volume of messages is not practical with a limited radio staff.

To provide all mariners with up-to-the-minute information automatically, the NAVTEX system was developed.

NAVTEX is an acronym meaning Navigational Telex, and as its name shows, it is a kind of narrow band radio teletype system for sending (by frequency shift keying) text messages expressed in a 7-unit code. The difference is that a NAVTEX transmitter transmits nine control characters (header code) ahead of the main message, so that the receiver can identify the station, message type and serial number automatically.

1.2 NAVTEX System Operation

For navigation purposes, the world is divided into 16 areas (called Navareas) as shown in the figure below. Each Navarea has multiple NAVTEX stations and each NAVTEX station has an identification code, from "A" to "Z." The frequency assigned to NAVTEX is only one (518 kHz), and many stations exist in the same Navarea. (Some stations use 490 kHz also.)

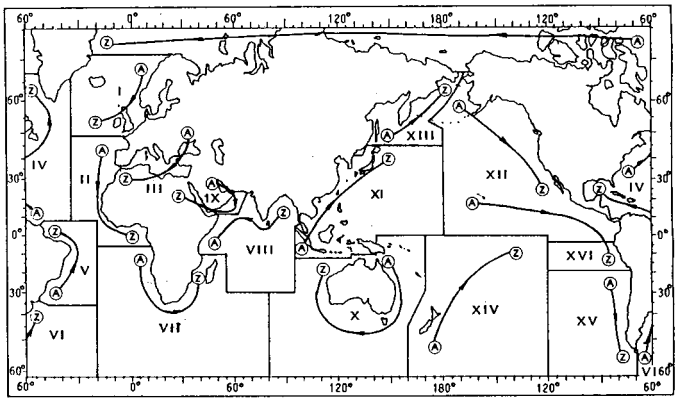

Figure 1-1 NAVTEX area

If the stations were to transmit without any rule, the system would collapse due to mutual interference. To avoid this problem, the following rules apply.

- The transmission schedule is determined so that two or more stations having a common service area may not overlap in time.
- Each station transmits with minimum required power to cover its service area (200 nautical miles nominal).

1.3 Message Format

For automatic identification of messages, each message starts with eight control characters, called "Header codes".

The first four characters are always "ZCZC" and common to all messages. This part is used for message synchronization. The latter four characters are designated as b1, b2, b3 and b4 to indicate origin, category and serial number of the message.

Character b1 is the identification letter of the NAVTEX station; "A" to "Z". Character b2 indicates the type of message, "A" to "Z", as listed below. Character b3 and b4 indicate the serial number of the message. The serial numbers are counted up from "01" to "99", and start from "01" again. Number "00" is specially reserved for important emergency messages, such as a search and rescue (SAR) message.

The end of each message is indicated by "NNNN" (four successive N's).

General message format is summarized below.

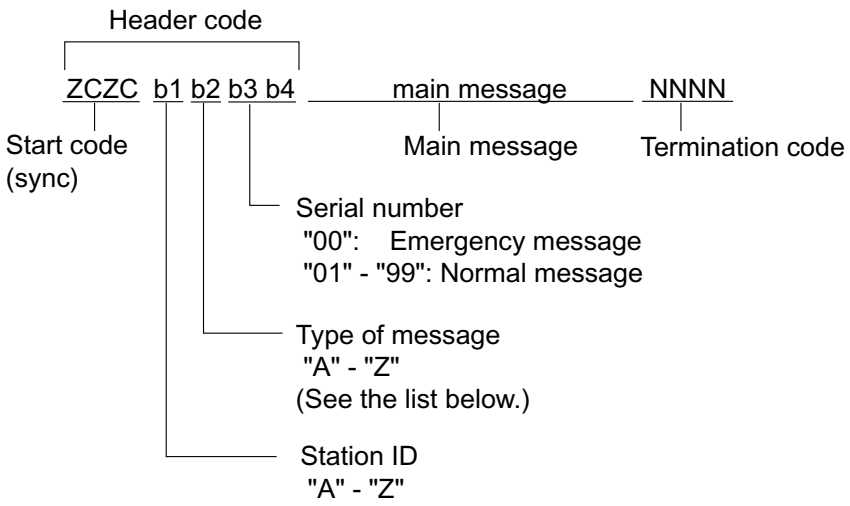

[Type of message (category)]

A:	Navigational warning	I:	OMEGA message
B:	Meteorological warning	J:	Differential OMEGA message
C:	Ice report	K:	Other electronic navigational aid system message
D:	Search and rescue information/ piracy and armed robbery	L:	Navigational warning (additional)
E:	Meteorological forecast	M to U:	Reserve-presently not used
F:	Pilot message	V:	Notice to Fishermen (U. S. only)
G:	DECCA message	W to Y	Reserve-presently not used
H:	LORAN-C message	Z:	QRU (no message on hand)

1.4 Display Indications

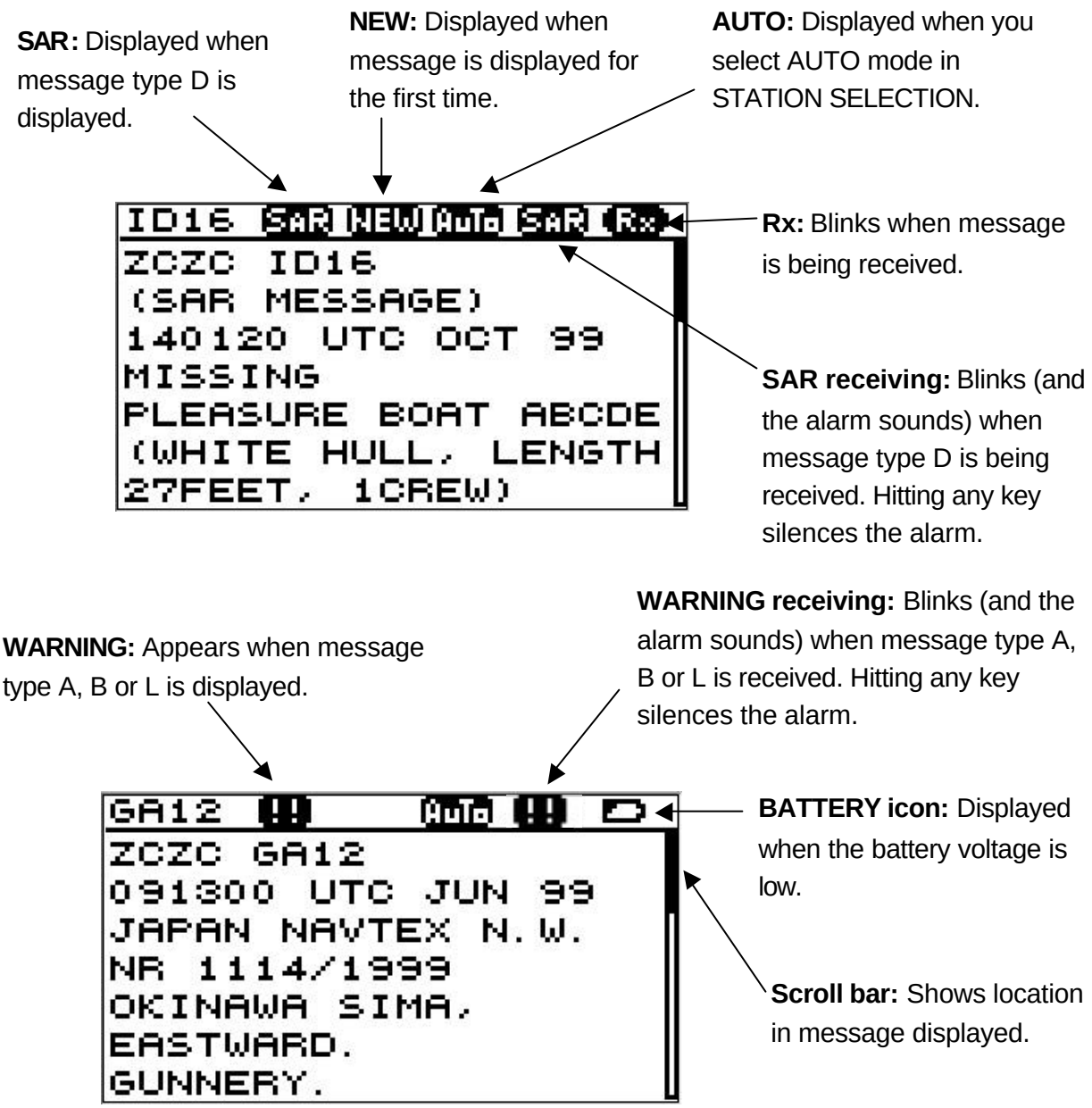

Figure 1-2 Display indications

1.5 NAVTEX Station Map

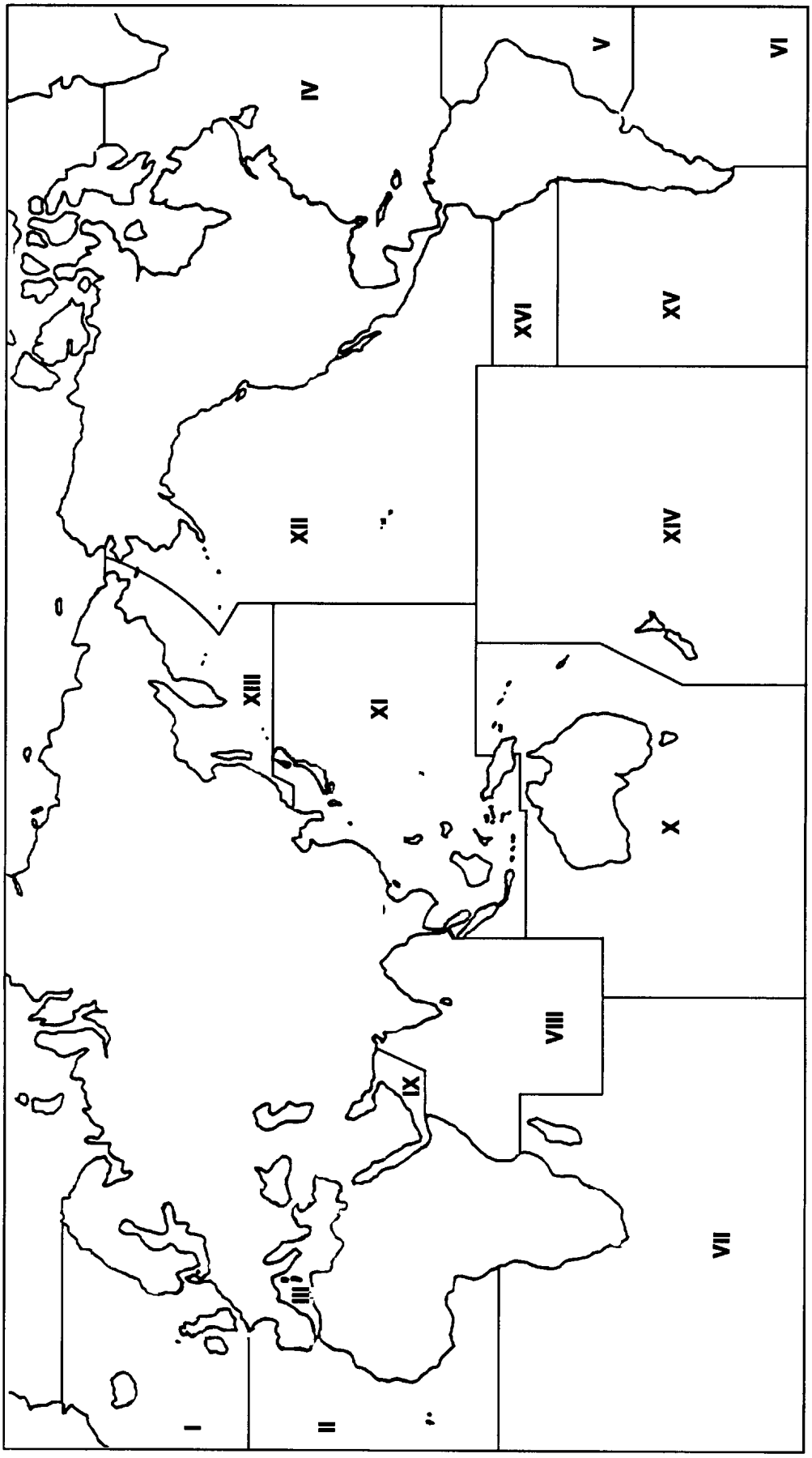

1.6 NAVTEX Station List

NAV area	Country	Station	Latitude	Longitude	518kHz B1	490kHz B1
I	Belgium	Oostende	51 11N	02 48E	M,T	
	Estonia	Tallinn	59 30N	24 30E	E,U	
	Iceland	Reykjavik Radio	64 05N	21 51W	R,X	
	Ireland	Valencia	51 56N	10 21W	W	
		Malin Head	55 22N	07 21W	Q	
	Netherlands	Netherlands Coast Guard	52 06N	04 15E	P	
	Norway	Bodo Radio	67 16N	14 23E	B	
		Rogaland Radio	58 39N	05 36E	L	
		Vardoe Radio	70 22N	31 06E	V	
		Svalbard	78 02N	13 40E	A	
	Sweden	Harnosand	64 28N	21 36E	H	
		Karlskrona	55 29N	14 19E	J	
		Stockholm Radio	59 16N	18 43E	U,D	
	United Kingdom	Cullercoats	55 02N	01 26W	G	I,U
		Portpatrick	54 51N	05 07W	O	C
		Niton	50 35N	01 18W	K	A,I
	Russian Federation	Murmansk	68 58N	33 05E	C	
		Archangel	64 33N	40 32E	F	
II	Cameroon	Douala	N.I.		N.I.	
	Cape Verde	Sao Vicente Radio	N.I.		N.I.	
	France	Cross Corsen	48 28N	05 03E	A	E
	Mauritania	Nouadhibou Radio	N.I.		N.I.	
	Morocco	Casablanca Radio	33 36N	07 38W	M	
	Portugal	Horta Radio	38 32N	28 38W	F	J
		Monsanto Radio	38 44N	09 11W	R	G
	Spain	Corunna	42 54N	09 16W	D	
		Tarifa	36 01N	05 34W	G	
		Las Palmas	28 10N	15 25W	I	
III	Bulgaria	Varna	43 04N	27 46E	J	
	Croatia	Split	43 30N	16 29E	Q	
	Cyprus	Cyprus	35 03N	33 17E	M	
	Egypt	Serapeum	30 28N	32 22E	X	
		Alexandria	31 12N	29 52E	N	
	France	Cross La Garde	43 06N	05 59E	W	S
	Greece	Heraklion	35 20N	25 07E	H	
		Corfu	39 37N	19 55E	K	
		Lemnos	39 52N	25 04E	L	
	Israel	Haifa	32 49N	35 00E	P	
	Italy	Roma	41 37N	12 29E	R	
		Augusta	37 14N	15 14E	S,V	
		Cagliari	39 13N	09 14E	T	
		Trieste	45 40N	13 46E	U	
	Malta	Malta	35 49N	14 32E	O	
	Russian Federation	Novorossiysk	44 42N	37 44E	A	
		Astrakhan	46 18N	47 58E	W	
	Spain	Cabo de la Nao	38 43N	00 09E	X	
	Turkey	Istanbul	41 04N	28 57E	D	
		Samsun	41 17N	36 20E	E	
		Antalya	36 53N	30 42E	F	
		Izmir	38 22N	26 36E	I	
	Ukraine	Mariupol	47 06N	37 33E	B	
		Odessa	46 29N	30 44E	C	

NAV area	Country	Station	Latitude	Longitude	518kHz B1	490kHz B1
IV	Bermuda(UK)	Bermuda	32 23N	64 41W	B	
	Canada	Sept Iles	50 12N	66 07W	C,D	
		Prescott	44 56N	81 14W	H	
		St. Johns	47 37N	52 40W	O	
		Thunder Bay	48 34N	88 39W	P	
		Sydney, Nova Scotia	46 11N	59 54W	Q,J	
		Yarmouth	43 44N	66 07W	U,V	
		Montreal	45 41N	73 16W	W,T	
		Labrador	53 42N	57 02W	X	
	Denmark(Greenland-West Coast)	Godthaab(Nuuk)	64 04N	52 01W	W	
	United States	Miami	25 37N	80 23W	A	
		Boston	41 39N	70 33W	F	
		New Orleans	29 53N	89 57W	G	
		Chesapeake	36 35N	76 01W	N	
		San Juan	18 28N	67 07W	R	
	Netherlands Antilles	Curacao	12 10N	68 52W	H	
V	Uruguay	Colonia	N.I.		N.I.	
		Laguna del Sauce	N.I.		N.I.	
		La Paloma	34 40S	54 09W	F	A
		Montevideo	N.I.		N.I.	
		Punta del Este	N.I.		N.I.	
		Salto	N.I.		N.I.	
VI	Argentina	Ushaia	54 48S	68 08W	A,M	
		Rio Gallegos	51 37S	65 03W	B,N	
		Comodoro Rivadavia	45 51S	67 25W	C,O	
		Bahia Blanca	38 43S	62 06W	D,P	
		Mar del Plata	38 03S	57 32W	E,Q	
		Buenos Aires	34 36S	58 22W	F,R	
VII	Namibia	Walvis Bay	23 03S	14 37E	B	
	South Africa	Cape Town	33 40S	18 43E	C	
		Port Elizabeth	34 02S	25 33E	I	
		Durban	30 00S	31 30E	O	
VIII	India	Bombay	19 05N	72 50E	G	
		Madras	13 05N	80 17E	P	
	Mauritius	Mauritius Radio	20 26S	57 41E	C	
IX	Bahrain	Hamala	26 09N	50 28E	B	
	Egypt	Serapeum (Ismailia)	30 28N	32 22E	X	
	Iran	Bushehr	28 59N	50 50E	A	
		Bandar Abbas	27 07N	56 04E	F	
	Saudi Arabia	Dammam	26 26N	50 06E	G	
		Jeddah	21 23N	39 10E	H	
	Oman	Muscat	23 36N	58 30E	M	
	Pakistan	Karachi	24 51N	67 03E	P	
X					NONE	

NAV area	Country	Station	Latitude	Longitude	518kHz B1	490kHz B1
XI	China	Sanya	18 15N	109 30E	M	
		Guangzhou	23 09N	113 29E	N	
		Fuzhou	26 02N	119 18E	O	
		Shanghai	31 07N	121 33E	Q	
		Dalian	38 51N	121 31E	R	
	Indonesia	Jayapura	02 31S	140 43E	A	
		Ambon	03 42S	128 12E	B	
		Makassar	05 06S	119 26E	D	
		Jakarta	06 06S	106 54E	E	
	Japan	Otaru	43 19N	140 27E	J	
		Kushiro	42 57N	144 36E	K	
		Yokohama	35 14N	139 55E	I	
		Moji	34 01N	130 56E	H	
		Naha	26 05N	127 40E	G	
	Korea,Republic of	Chukpyun	37 03N	129 25E	V	
		Pyonsan	35 36N	126 29E	W	
	Malaysia	Penang	05 25N	100 24E	U	
		Miri	04 25N	114 01E	T	
		Sandakan	05 54N	118 00E	S	
	Philippines	Manila	14 35N	121 03E	J	
		Puerto Princesa	09 44N	118 43E	I	
		Davao	07 04N	125 36E	K	
	Singapore	Singapore	01 25N	103 52E	C	
	Thailand	Bangkok Radio	13 44N	100 34E	F	
	United States	Guam	13 29N	144 50E	V	
	Vietnam	Ho Chi Minh City	10 47N	106 40E	X	
		Haiphong	20 44N	106 44E	P	W
		Danang	16 05N	108 13E	W,P	
	Taiwan	Chilung	25 09N	121 44E	P	
	Associate Member of IMO	Hong Kong	22 13N	114 15E	L	
XII	Canada	Prince Rupert	54 18N	130 25W	D	
		Tofino	48 55N	125 33W	H	
	United States	San Francisco	37 56N	122 44W	C	
		Kodiak	57 46N	152 34W	J,X	
		Honolulu	21 16N	158 09W	O	
		Cambria	35 31N	121 03W	Q	
		Astoria	46 12N	123 57W	W	
		Adak	51 54N	176 38W	X	
XIII	Russian Federation	Vladivostok	43 07N	131 53E	A	
		Kholmsk	47 02N	142 03E	B	
		Petropavlovsk	53 00N	158 40E	C	
		Magadan	59 40N	151 01E	D	
		Beringovskiy	63 03N	179 20E	E	
		Provideniya	64 40N	173 10W	F	
		Astrakhan	44 20N	48 02W	W	
XIV					NONE	

NAV area	Country	Station	Latitude	Longitude	518kHz B1	490kHz B1
XV	Chile	Antofagasta	23 39S	70 25W	A,H	
		Valparaiso	32 48S	71 29W	B,I	
		Talcahuano	36 43S	73 06W	C,J	
		Puerto Montt	41 30S	72 58W	D,K	
		Punta Arenas	53 12S	70 56W	E,L	
		Isla de Pascua	27 09S	109 25W	F,G	
XVI	Peru	Paita	05 05S	81 07W	S	
		Callao	12 03S	77 09W	U	
		Mollendo	17 01S	72 01W	W	
	Ecuador	Guayaquil	02 17S	79 52W	M	

Note: The list shows the stations listed at Longwave Navtex Broadcasts (2001-04-16). For details, see the Web side http://www.globalserve.net/~hepburnw/dx/navtex.htm

2. OPERATION

2.1 Control Description

All operation of the NX-300 is carried out with the controls on the front panel of the display unit.

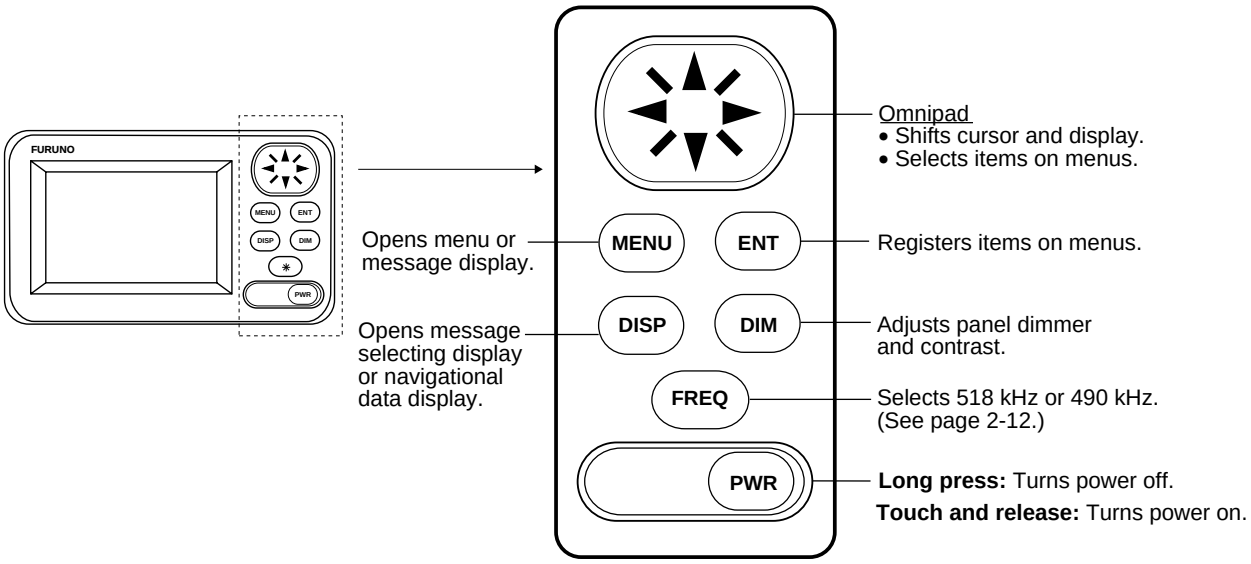

Figure 2-1 Control panel

2.2 Turning the Power On/Off

Turning on: Press the [PWR] key.

To confirm version number of the equipment, press the [PWR] key a little longer. Release the key when the following window appears.

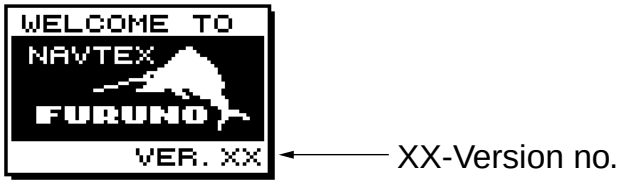

Figure 2-2 TURNING ON window

Turning off: Press the [PWR] key for 3 seconds.

Figure 2-3 TURNING OFF window

Note: The NX-300 should be turned on for the duration of a voyage so that important warning messages will not be missed.

2.3 Adjusting Dimmer and Contrast

1. Press the [DIM] key to show the dimmer and contrast setting window.

Figure 2-4 DIMMER and CONTRAST setting window

2. Press ▲ or ▼ for best illumination of the control panel and LCD.
3. Press ◀ or ▶ for best contrast of the LCD.
4. Press the [ENT] key to close the dimmer and contrast setting window.

Note: If you turn off the power with contrast less than 36, contrast is automatically set to 36 when you turn on the power again.

2.4 Menu Operation Overview

The menu allows you to custom tailor the NX-300 according to your needs. You can select which categories of message you wish to receive, specify which data to display, etc.

1. Press the [MENU] key to open the main menu.

Figure 2-5 Main menu

2. Press ▲ or ▼ to select menu item. As you operate ▲ or ▼, the selected item appears in reverse video. For example, select FUNCTIONS.
3. Press the [ENT] key to open menu selected.

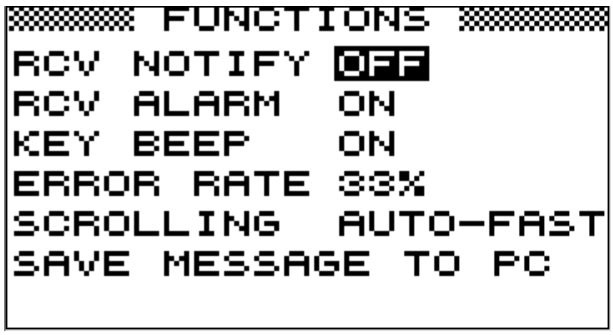

Figure 2-6 FUNCTIONS menu

4. Press ▲ or ▼ to select menu item and press the [ENT] key. For example, select RCV ALARM. Corresponding option menu appears.

Figure 2-7 ON/OFF window

5. Press ▲ or ▼ to select option desired.
6. Press the [ENT] key to resister your selection.
7 Press the [MENU] key once to return to the menu or twice to quit the menu.

2.5 Selecting Stations

The STATION SELECTION menu allows you to select what stations to receive, automatically or manually. In the AUTO mode stations are automatically selected according to the distance between own ship and NAVTEX stations. External navigational data is required to use the AUTO mode. If it is not input, all stations are selected. In the MANUAL mode you can select what stations you wish to receive. Default setting is the AUTO mode.

1. Press the [MENU] key to open the main menu.
2. Press ▲ or ▼ to select STATION SELECTION.
3. Press the [ENT] key. The MODE window appears.

Figure 2-8 MODE window

4. Press ▲ or ▼ to select AUTO or MANUAL as desired.
5. For the AUTO mode, press the [ENT] key to close the menu.
   For the MANUAL mode, do the following:
   a) Press the [ENT] key. The STATION SELECTION menu appears.

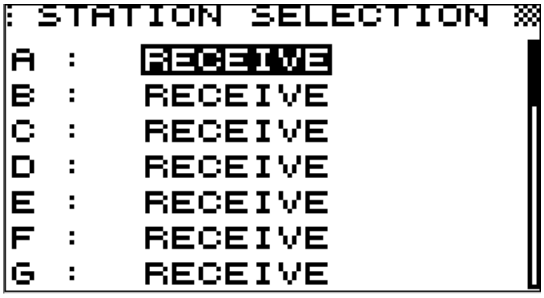

Figure 2-9 STATION SELECTION menu

   b) Press ▲ or ▼ to select a station you want to change the current setting.
   c) Press the [ENT] key to show the following window.

Figure 2-10 RECEIVE/IGNORE window

d) Press ▲ or ▼ to select RECEIVE or IGNORE depending on whether you want to select or deselect the station.
e) Press the [ENT] key.
f) Repeat steps b) to e) to select or deselect other stations.
g) Press the [MENU] key or [DISP] key to close the STATION SELECTION menu.

2.6 Selecting Messages

1. Press the [MENU] key to open the main menu.
2. Press ▲ or ▼ to select MESSAGE SELECTION.
3. Press the [ENT] key to show the MESSAGE SELECTION menu.

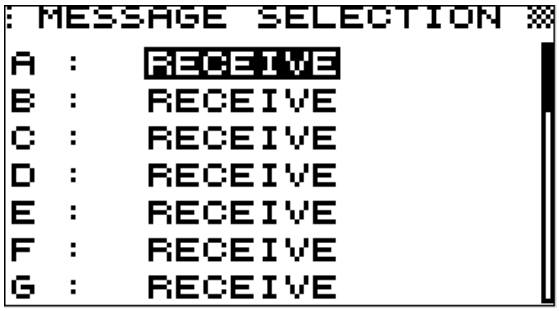

Figure 2-11 MESSAGE SELECTION menu

4. Press ▲ or ▼ to select a message you want to change the current setting.
5. Press the [ENT] key to show the following window.

Figure 2-12 RECEIVE/IGNORE window

6. When you change RECEIVE into IGNORE for message type A, B, D or L, the following window appears to confirm. For all other message types proceed to step 8.

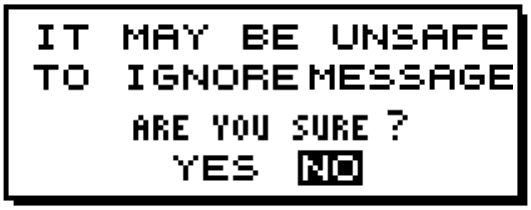

Figure 2-13 Ignore message window

7. Press ◀ or ▶ to select YES or NO. Select YES to change the current setting, or NO not to change.
8. Press the [ENT] key.
9. Repeat steps 4 to 8 to select or deselect other message types.
10. Press the [MENU] key or [DISP] key to close the MESSAGE SELECTION menu.

2.7 Setting Functions (FUNCTIONS menu)

See menu description below for detailed information.

1. Press the [MENU] key to open the main menu.
2. Press ▲ or ▼ to select FUNCTIONS.
3. Press the [ENT] key to display the FUNCTIONS menu.

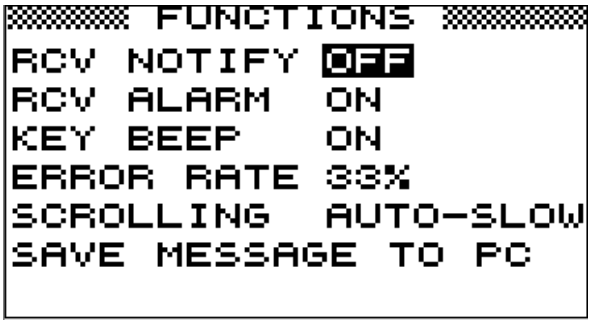

Figure 2-14 FUNCTIONS menu

4. Press ▲ or ▼ to select menu item and press the [ENT] key.
5. Press ▲ or ▼ to select option desired.
6. Press the [ENT] key to register your selection.
7. Press the [MENU] key twice to close the menu.

2.7.1 FUNCTIONS menu description

RCV NOTIFY: The raw NAVTEX signal can be monitored through the monitor speaker by turning RCV NOTIFY on. The default setting is OFF.

RCV ALARM: The audible alarm may be generated when message type A, B, D or L is received. The default setting is ON.

KEY BEEP: The equipment can emit a beep tone when a control is operated. The default setting is ON.

ERROR RATE: When character error occurs due to noise interference during signal propagation, erroneous character is displayed as "∗".

Error Rate means character error rate and is calculated as followed:
Error Rate = number of erroneous characters ÷ total number of characters received × 100 (%)
(Total number of characters includes space, line feed, carriage returns, etc.)

When the character error rate is within the percentage you set (0-39%), the NX-300 displays the message and stores it. When it exceeds the percentage you set, the NX-300 neither displays nor stores the message. You may set the threshold level of character error rate as desired and the default setting is 33%.

SCROLLING: This menu item lets you select how to scroll the message display. The default setting is AUTO-SLOW.

AUTO-SLOW: Long press of ▲ or ▼ scrolls line-by-line slowly automatically. Touch and release ▼ to scroll manually.

AUTO-FAST: Long press of ▲ or ▼ scrolls line-by-line automatically, faster than AUTO-SLOW. Touch and release ▼ to scroll manually.

SKIP-$$: The U.S. National Weather Service broadcasts weather information via the U.S. Coast Guard NAVTEX stations. Their messages contain $$, the continue indicator. You can quickly jump to the next continue indicator. Long press of ▲ or ▼ skips to $$.

SAVE MESSAGE TO PC: Select to download message to a PC. See the next paragraph.

2.7.2 Downloading Messages to a PC

Wiring

Your equipment provides a wiring diagram that shows how to connect to a PC using a DSUB 9-pin connector. Refer to the interconnection diagram for details.

1. Press the [MENU] key to open the main menu.
2. Press ▲ or ▼ to select SYSTEM MENU.
3. Press the [ENT] key to show the SYSTEM MENU.
4. Press ▼ to select WIRING INFO?.
5. Press the [ENT] key to show the wiring info display.

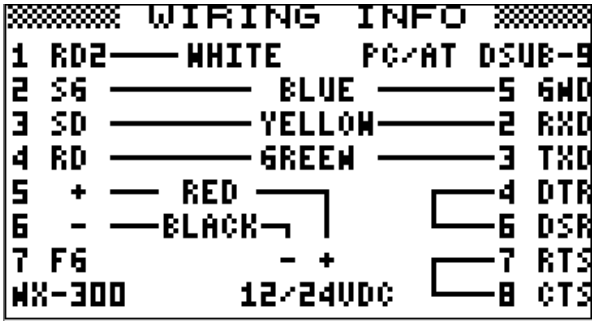

Figure 2-15 Connection to PC using a DSUB 9-pin connector

A DSUB 25-pin (EIA-232) may also be used to make the connection. In this case the wiring diagram is as follows.

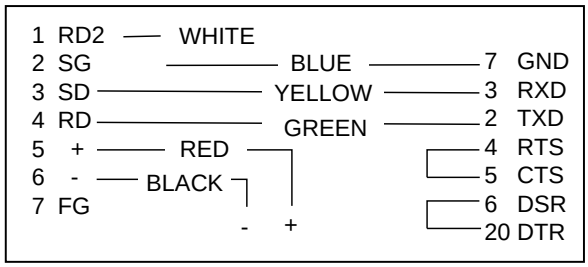

Figure 2-16 Connection to PC using a DSUB 25-pin connector

Setting for communication software on PC

Baud Rate:	4800 bps
Character Length:	8 bit
Stop Bit:	1 bit
Parity:	None
X Control:	XON/XOFF

Downloading messages to a PC

Set up the computer to receive data. Messages are downloaded to a PC character by character during reception.

To download all messages saved in NX-300, do the following;

1. Press the [MENU] key to open the main menu.
2. Press ▲ or ▼ to select FUNCTIONS.
3. Press the [ENT] key to show the FUNCTIONS menu.
4. Press ▼ to select SAVE MESSAGE TO PC.
5. Press the [ENT] key. The following display appears.

Figure 2-17 SAVE MESSAGE TO PC display

6. Press the [ENT] key.

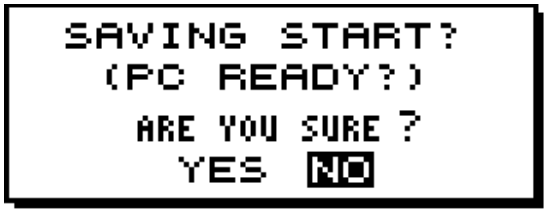

Figure 2-18 SAVING START window

7. Set up the computer to receive data.
8. Press ◀ to select YES and press the [ENT] key.

9. Press the [ENT] key to save. The following messages appear in order.

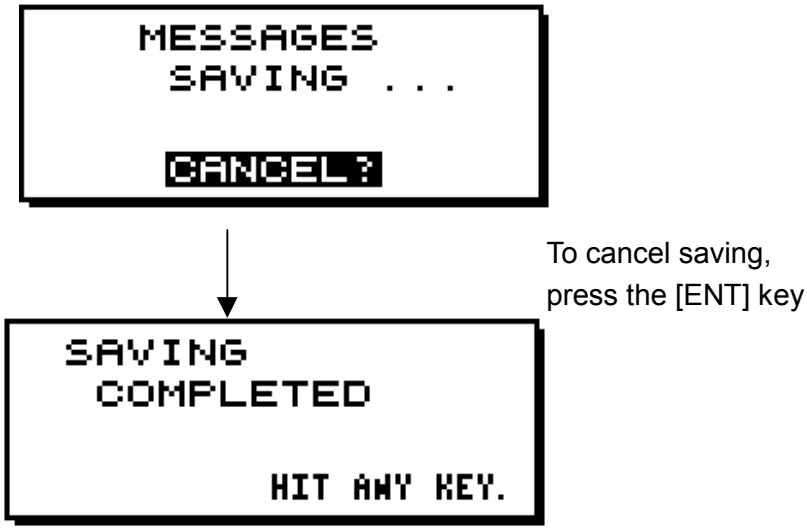

Figure 2-19 SAVING MESSAGES window

10. Press any key to escape.

Note1: No message is received during downloading.

Note2: When a PC or a serial printer is connected to the NX-300, received messages are displayed on a PC or printed on a serial printer but not displayed or saved to the NX-300 in the following cases;

- The NX-300 receives a message it has already saved.
- A message is interrupted to receive.

2.8 Selecting Language

You can select language displayed on the NX-300. Languages are English, French, German, Italian, Spanish, Dutch, Danish, and Portuguese.

1. Press the [MENU] key to open the main menu.
2. Press ▼ to select LANGUGE.
3. Press the [ENT] key. The following menu appears. (ENG: English, FRA: French, GER: German, ITA: Italian, SPA: Spanish, DUT: Dutch, DEN: Danish, POR: Portuguese)

Figure 2-20 LANGUAGE menu

4. Use the Omnipad to select language desired.
5. Press the [ENT] key to register your selection and press the [MENU] key to close the menu.

2.9 Display Messages

The NX-300 automatically saves and stores up to 132 received messages (However, the memory capacity is limited to 28,000 characters). If memory of the NX-300 is full, messages are deleted on order of time.

1. Press the [DISP] key to show the received messages log. Messages (numbers) are arranged in the order received from latest to earliest, Left to right.

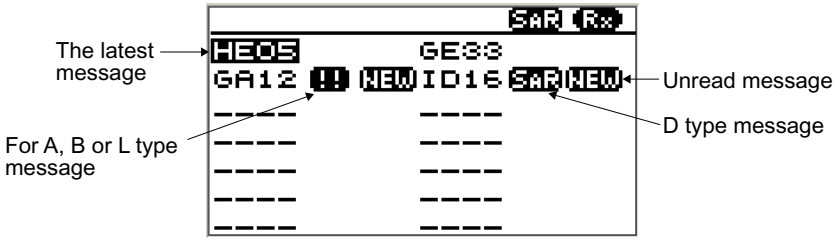

Figure 2-21 Received messages log

2. Operate the Omnipad to select the message to display. If more than 15 messages are saved, the scroll bar appears at the left side of the display. Press ▲ or ▼ to scroll the display.
3. Press the [ENT] key to display the message selected.

Note: If you want to see the received frequency (518 kHz or 490 kHz) also, change the window mode as shown on page 4-2.

2.10 Sample Messages

When message is displayed, press ▲ or ▼ to scroll message and press ◀ or ▶ to display the other message. When the oldest or newest message is displayed, the beep sounds.

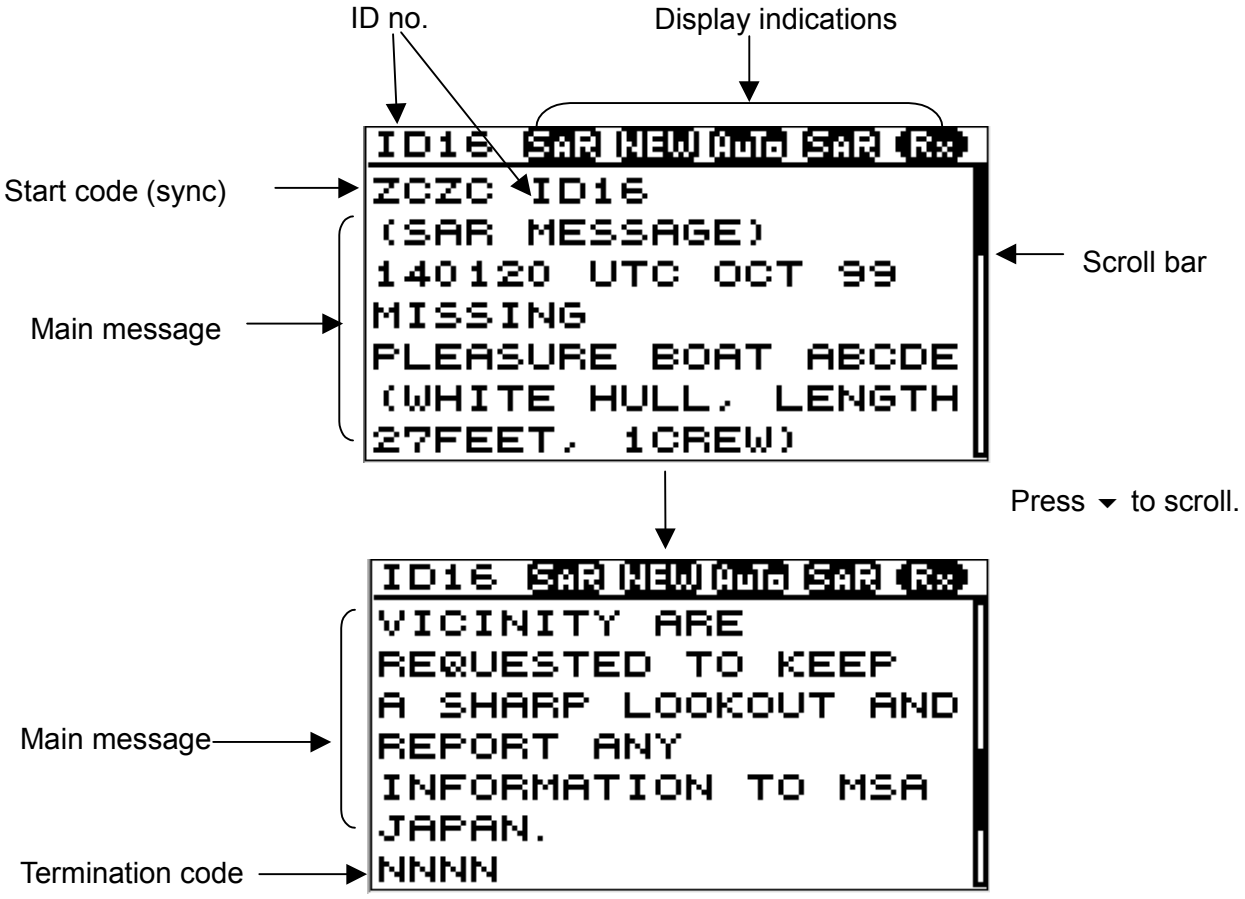

Figure 2-22 Sample messages

2.11 Displaying Navigation Data

With navigation data input the NX-300 can display navigation data, in addition to its primary function.

1. Press the [DISP] key to display the receiving messages log.
2. Press the [DISP] key again to display navigation data.

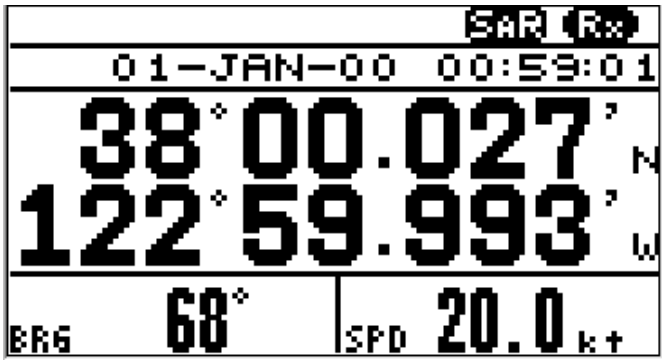

Figure 2-23 Nav data display

3. To go to the standby NAVTEX display, press the [DISP] key again.

2.12 Selecting Receive Frequency

1. Press the [FREQ] key to show the frequency window.

(Default setting is 518 kHz)

Figure 2-24 Frequency window

2. Press ▲ or ▼ to select receive frequency as appropriate.
3. Press the [ENT] key to close the frequency window.

3. SYSTEM MENU

3.1 Units of Measurement

When navigational data is fed to the NX-300, you can select units of distance and speed to use. Distance/speed can be displayed in nautical miles/knots, kilometers/kilometers per hour, or miles/ miles per hour. The default setting is nautical miles/knots.

1. Press the [MENU] key to open the main menu.
2. Press ▲ or ▼ to select SYSTEM MENU.
3. Press the [ENT] key. The SYSTEM MENU appears.

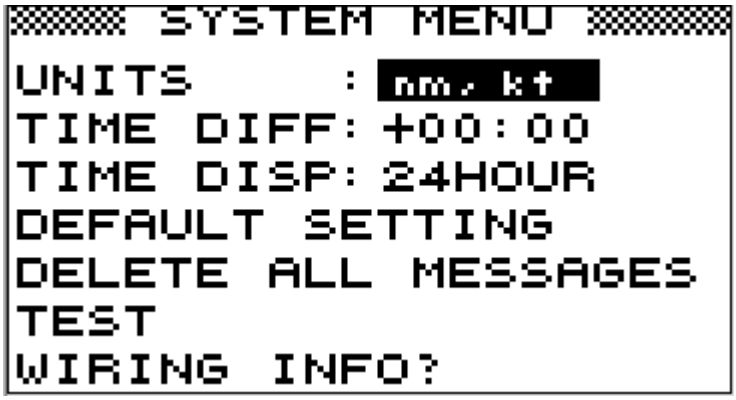

Figure 3-1 SYSTEM MENU

4. Press the [ENT] key. The following window appears.

Figure 3-2 UNITS window

5. Press ▲ or ▼ to select combination desired; nm, kt; km, km/h; mi, mi/h.
6. Press the [ENT] key.
7. Press the [MENU] key or [DISP] key to close the SYSTEM MENU.

3.2 Time Difference (using local time)

GPS uses UTC time. If a GPS receiver feeds nav data to the NX-300 and you would rather use local time, enter the time difference (range: -13:30 to +13:30) between local time and UTC time.

1. Press the [MENU] key to open the main menu.
2. Press ▲ or ▼ to select SYSTEM MENU.
3. Press the [ENT] key to open the SYSTEM MENU.

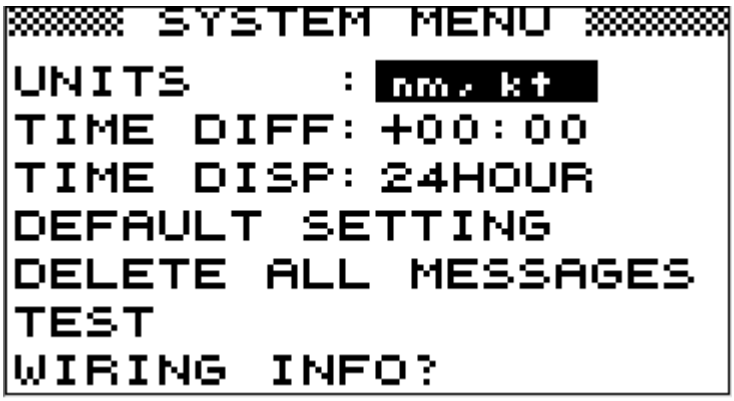

Figure 3-3 SYSTEM MENU

4. Press ▼ to select TIME DIFF.
5. Press the [ENT] key. A cursor circumscribes + or -. This cursor appears whenever selected data can be changed with Omnipad.
6 Press ▲ or ▼ to display + or -.
7. Press ▶ to move the cursor to the next column.
8. Press ▲ or ▼ to select number desired.
9. Repeat steps 7 and 8 to complete.
10. Press the [ENT] key.
11. Press the [MENU] key or [DISP] key to close the SYSTEM MENU.

3.3 Time Display

When navigational data is fed to the NX-300, you may display the time in 12-hour or 24-hour notation. The default setting is 24-hour notation. AM or PM is shown when 12-hour notation is selected.

1. Press the [MENU] key to open the main menu.
2. Press ▲ or ▼ to select SYSTEM MENU.
3. Press the [ENT] key. The SYSTEM MENU appears.
4. Press ▼ to select TIME DISP.
5. Press the [ENT] key. The following window appears.

Figure 3-4 TIME DISP window

6. Press ▲ or ▼ to select 12HOUR or 24HOUR as appropriate.
7. Press the [ENT] key.
8. Press the [MENU] key or [DISP] key to close the SYSTEM MENU.

3.4 Default Setting

This function restores all default settings.

1. Press the [MENU] key to open the main menu.
2. Press ▲ or ▼ to select SYSTEM MENU.
3. Press the [ENT] key to show the SYSTEM MENU.
4. Press ▼ to select DEFAULT SETTING.
5. Press the [ENT] key. The following window appears.

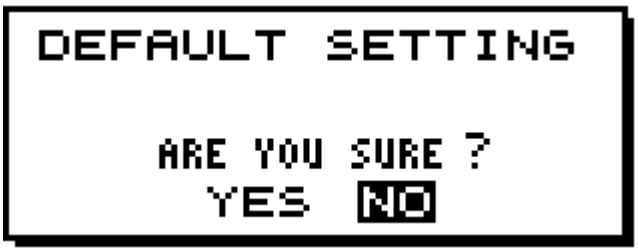

Figure 3-5 DEFAULT SETTING window

6. Press ◀ to select YES. If you want to cancel, press the [ENT] key to select NO before pressing ◀ .
7. Press the [ENT] key.
8. Press the [MENU] key or [DISP] key to close the SYSTEM MENU.

3.5 Delete All Messages

This function deletes all messages NX-300 saves.

1. Press the [MENU] key to open the main menu.
2. Press ▲ or ▼ to select SYSTEM MENU.
3. Press the [ENT] key to show the SYSTEM MENU.
4. Press ▼ to select DELETE ALL MESSAGES.
5. Press the [ENT] key. The following window appears.

Figure 3-6 DELETE ALL MESSAGES window

6. Press ◀ to select YES.
7. Press the [ENT] key.
8. Press the [MENU] key or [DISP] key to close the SYSTEM MENU.

3.6 User Display of Navigation Data

The NX-300 can function as nav data display when connected to navigation equipment.

You may choose what data to display in the three cells below the date and time indications on the nav data display. The choices of data are speed, course, range, bearing, power source voltage and position in latitude and longitude (not available for “LEFT” or “RIGHT”).

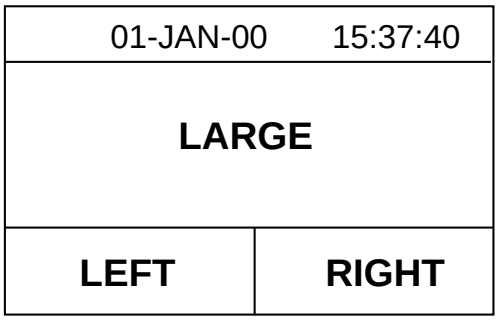

Figure 3-7 Location of nav data indications

1. Press the [MENU] key to open the main menu.
2. Press ▼ to select USER DISPLAY.

3. Press the [ENT] key to show the USER DISPLAY menu. The cursor is now on the LARGE field. LARGE means the center indication on the nav data display.

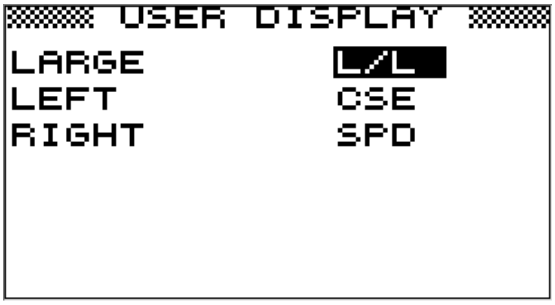

Figure 3-8 USER DISPLAY

4. Press the [ENT] key. The following window appears.

Figure 3-9 Options for LARGE window

5. Operate the Omnipad to select item desired. (SPD: Speed, CSE: Course, RNG: Range to destination, BRG: Bearing to destination, PWR: Power source voltage, L/L: position in latitude and longitude)
6. Press the [ENT] key.
7. Select the items LEFT and RIGHT and set their options like you did for LARGE, referring to Figure 3-12 for location of indications.

Figure 3-10 Options for LEFT, RIGHT

8. Press [DISP] key twice to display the navigation data.

The figure below shows display appearance for the setting shown in Figure 3-8.

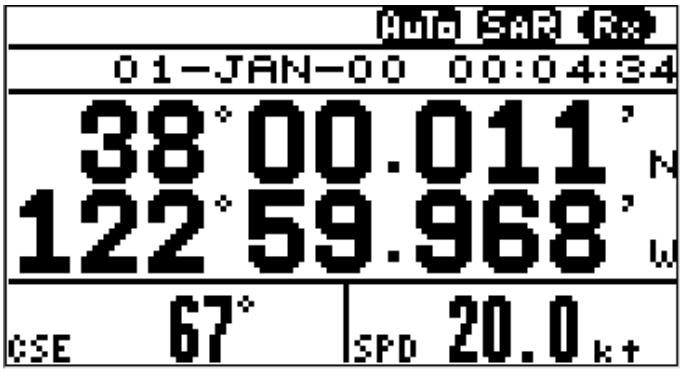

Figure 3-11 Nav data display

4. OTHER FUNCTIONS

4.1 DEMO Mode

The DEMO mode provides simulated operation of this unit. Connection of antenna is not necessary. You may select stations and messages manually or automatically and demo messages are received. All controls are operative.

Note: Turning on the DEMO mode erases all messages.

Press the [PWR] key while pressing ▸ to turn the power on. “SET DEMO MODE!” appears momentarily. “DEMO” appears at the top of the screen when the DEMO mode is active.

DEMO mark

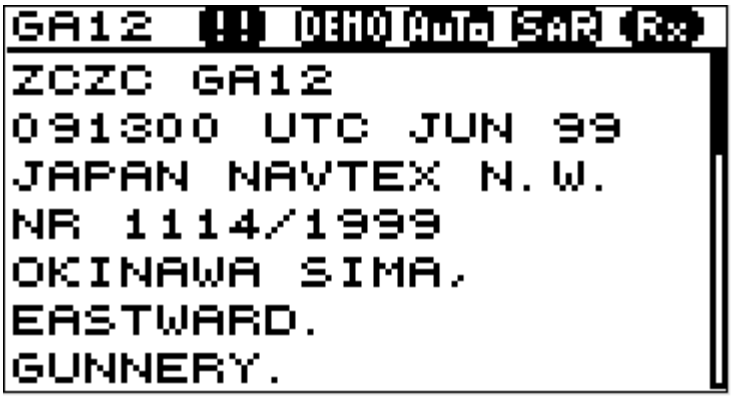

Figure 4-1 Message display

To escape the DEMO mode, press the [PWR] key while pressing ▸. “RESET DEMO MODE!” appears momentarily.

4.2 VIEW Mode

The NX-300 ordinarily displays messages in their entirety. The VIEW mode, however displays messages character by character.

Press the [PWR] key while pressing ▾ to turn the power on. “SET VIEW MODE!” appears momentarily. “VIEW” is displayed at the upper left corner of the display.

To quit the VIEW mode,: repeat above procedure. “RESET VIEW MODE!” appears.

4.3 All Clear

This function deletes all messages and restores default settings. When the NX-300 is first installed, you should clear all data.

Press the [PWR] key while pressing ▲ to turn the power on. “RESET BACKUP DATA!” appears momentarily while data is being cleared. Then, all default settings are restored.

4.4 Changing Received Message Log Window

You can show received frequency on the received message log as shown below.

1. Press the [PWR] key while pressing ◂ to turn the power on.
2. Press the [DISP] key to show the received message log. The received frequencies (518 kHz and 490 kHz) are displayed on the window.

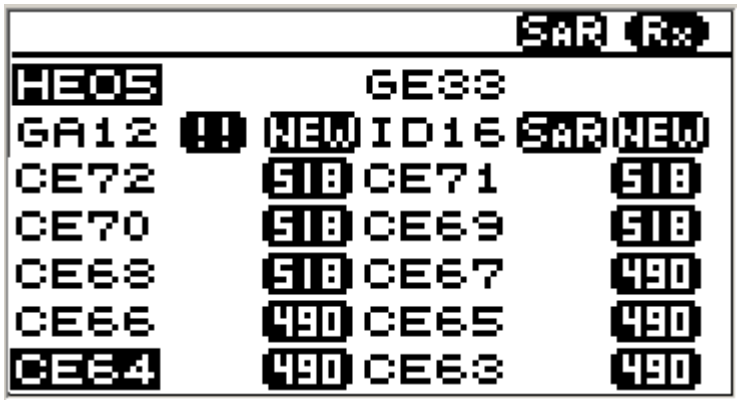

Figure 4-2 Received message log

3. To restore it, do step 1.

5. MAINTENANCE & TROUBLESHOOTING

⚠ WARNING

Do not open the equipment.

Only qualified personnel should work inside the equipment. Further, watertightness may be reduced.

5.1 Maintenance

Check the following points regularly to maintain performance:

- Check that connectors on the rear panel are firmly tightened and free of rust.
- Check that the ground system is free of rust and the ground wire is tightly fastened.
- Check that battery terminals are clean and free of rust.
- Check the antenna for damage. Replace if damaged.
- Dust and dirt on the keyboard and display screen may be removed with a soft cloth. Do not use chemical cleaners to clean the equipment; they may remove paint and markings.

5.2 Diagnostic Test

The diagnostic test checks ROM, RAM, data port, battery, keyboard and LCD for proper operation and displays program numbers.

1. Press the [MENU] key to open the main menu.
2. Press the ▲ or ▼ to select SYSTEM MENU.
3. Press the [ENT] key to show the SYSTEM MENU.
4. Press ▲ or ▼ to select TEST.
5. Press the [ENT] key. You are asked if you are ready to start the test.

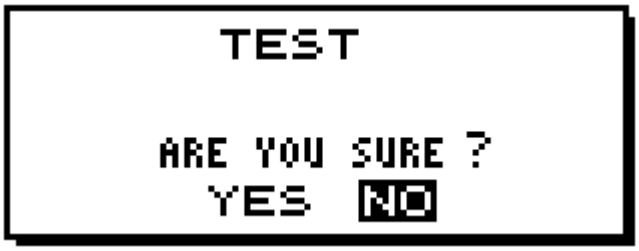

Figure 5-1 TEST window

6. Press the ◀ to select YES.

7. Press the [ENT] key to start the test. The equipment checks ROM, RAM, SIO and internal battery, and the results are individually displayed as OK or NG (No Good). Program numbers appear at the bottom of the display.

   Note 1: SIO requires a special connector to check. “03” appears as the result when no connector is connected.

   Note 2: CNT is the number of times test has been consecutively executed.

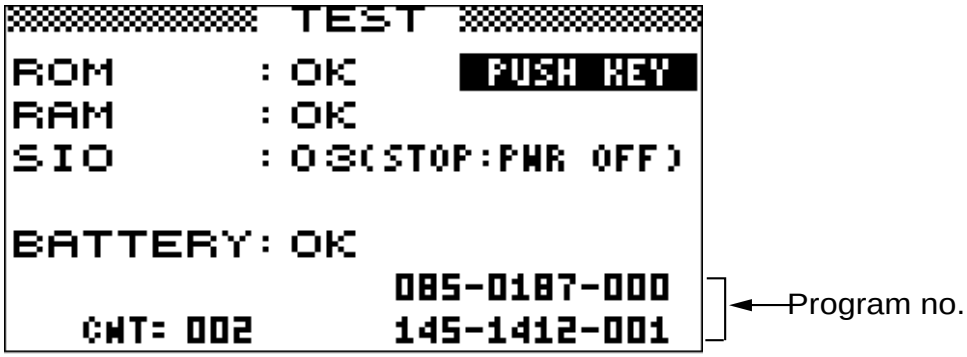

Figure 5-2 TEST display

   After the equipment has checked the items shown in Figure 5-2, a beep sounds and the message PUSH KEY appears at the top right-hand corner.

8. Press each key one by one. The name of the key pressed momentarily appears at the top of right-hand corner if the key is functioning properly.

   Note: If no key is pressed within approx. five seconds, the equipment automatically displays the following message to inform you that it is now going to check the LCD.

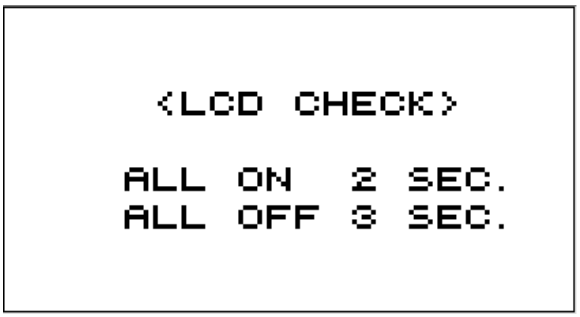

Figure 5-3 LCD CHECK display

9. The test repeats. Turn off the power to stop the test.

5.3 When the Battery Icon Appears

A lithium battery (type: CR2354-1F2, code no.: 000-142-305) is installed on the circuit board inside the display unit, and it preserves data when the power is turned off. The life of the battery is about 5-10 years. Its voltage is checked when the power is turned on. When its voltage is low the battery icon appears on the display to alert you. When this happens, contact your dealer to request replacement of the battery.

Note: When the battery is dead, all default settings are restored.

5.4 Replacement of Fuse

The 1 A fuse in the snap-in fuse holder on the power cable protects the equipment from equipment fault and reverse polarity of the ship's mains. If the fuse blows find out the cause before replacing it. If the fuse blows again after replacement, contact a FURUNO agent or dealer for advice. Use only a 1 A fuse – use of a different fuse will damage the equipment and void the warranty.

⚠ CAUTION

Use the proper fuse.

Use of a wrong fuse can cause fire or equipment damage.

6. INSTALLATION

6.1 Installation of Display Unit

Mounting considerations

The display unit can be installed on a tabletop, on the overhead, or in a panel (optional flush mounting kit required). Refer to the outline drawings at the end of this manual for installation instructions. When selecting a mounting location, keep in mind the following points:

- Locate the unit away from exhaust pipes and vents.
- The unit is waterproof thus it can be installed outdoors. However, locate it of direct sunlight, (or in a suitable, ventilated enclosure) to prevent heat which can build up inside the cabinet.
- The mounting location should be well ventilated.
- Mount the unit where shock and vibration are minimal.
- Allow sufficient maintenance space at the sides and rear of the unit and leave sufficient slack in cables, to facilitate maintenance and servicing.
- Observe the following compass safe distances to prevent deviation of a magnetic compass; Standard compass, 0.5 m, Steering compass, 0.3 m.
- After you install this equipment, perform All Clear as in paragraph 4.3 on page 4-1.

Tabletop overhead mounting

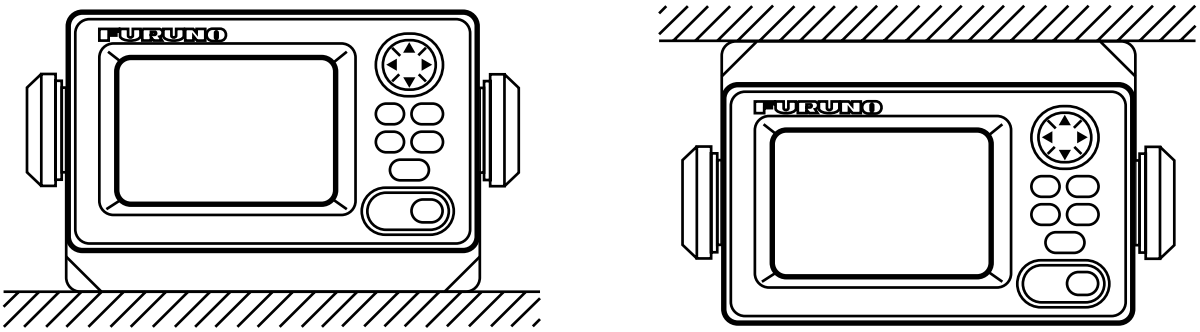

Tabletop Overhead

Figure 6-1 Tabletop and overhead mounting methods

Flush mounting

There are two types of flush mounting kits. For details, see the outline drawings at the end of this manual.

6.2 Installation of Antenna Unit

Mounting considerations

Install the antenna unit referring to the antenna installation diagram at the end of this manual. When selecting a mounting location for the antenna unit, keep in mind the following points:

- Do not shorten the antenna cable (10 m cable fitted to the antenna).
- The length of the whip antenna for the NX-3E should be no longer than 1.2 m and no larger than 5 mm in diameter to prevent antenna damage. Do not use a 2.5 m whip antenna. Use spring washer (supplied) for whip antenna.
- The NX-300 contains a very sensitive receiver. To avoid mutual interference with other radio equipment, do not install this unit near an SSB/VHF/CB radiotelephone.
- If the antenna cable is to be passed through a hole which is not large enough to pass the connector, you may unfasten the connector with a needle nose pliers and 3/8-inch open-end wrench. Refasten it as shown in Figure 6-2, after running the cable through the hole.
- If you install the antenna unit except the NX-3E and the NX-3H, contact your dealer.

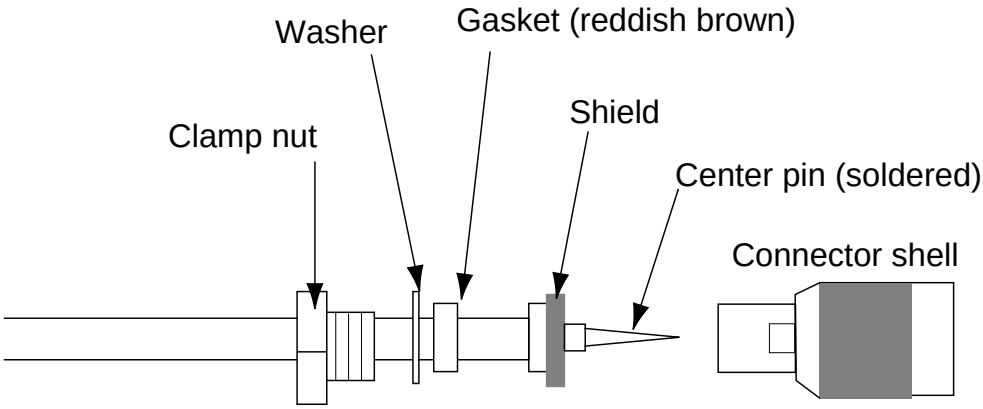

Figure 6-2 How to assemble the connector

6.3 Wiring

The figure below shows where to connect cables on the rear of the display unit.

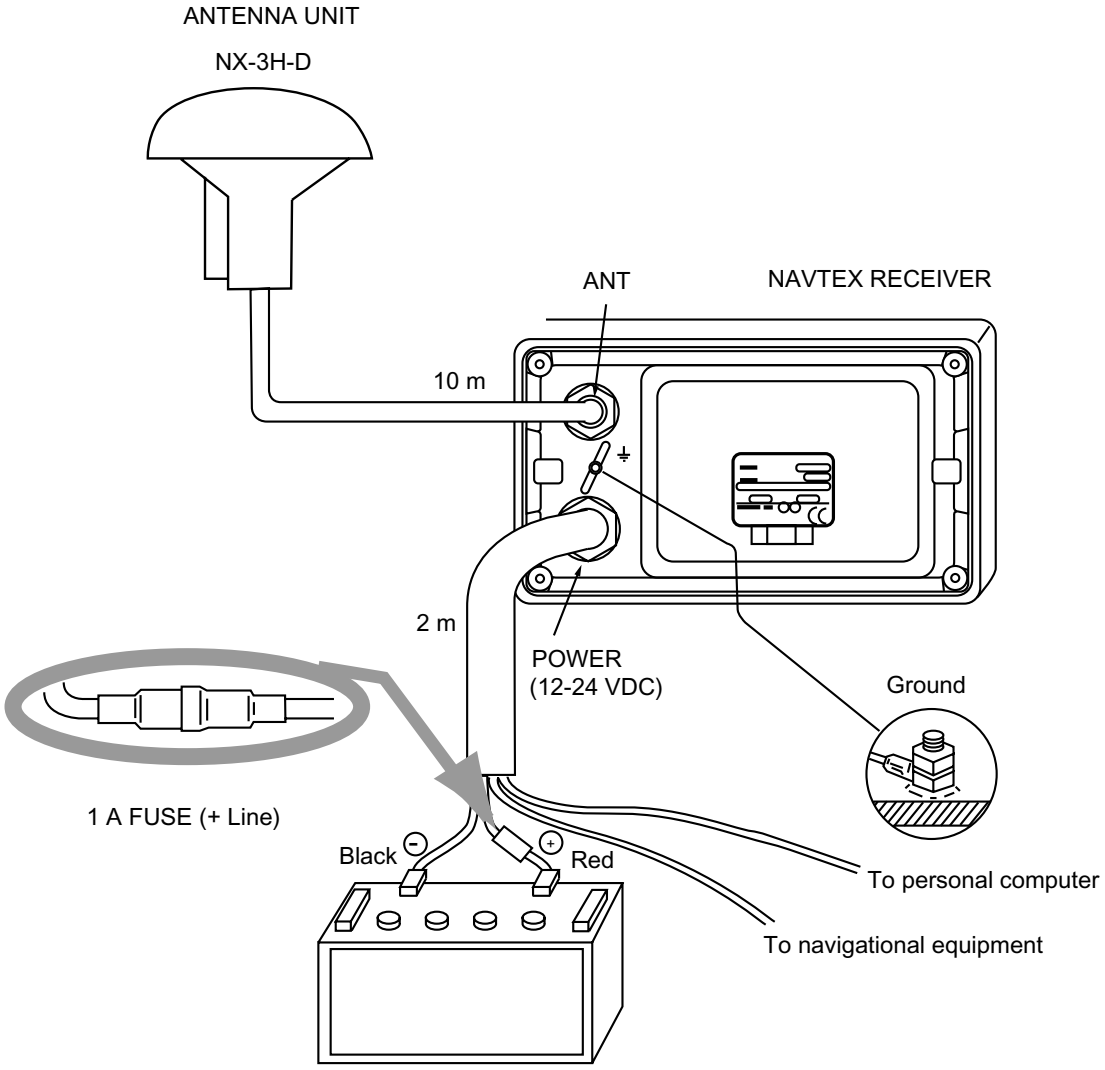

Figure 6-3 Wiring

Note: The fuse holder contains a spring that fixes the fuse. To prevent detachment of the spring, which would cause loss of power, tie the line as shown in Figure 6-4.

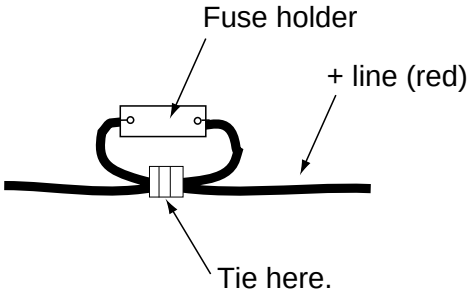

Figure 6-4 How to fix spring in fuse holder

Grounding

- The ground wire (local supply) should be 1.25 sq or larger for Navtex Receiver. The ground wire should be as short as possible.
- The signal ground and frame ground are separated, however the power line is not isolated. Therefore, if connecting other equipment which has signal ground connected to frame ground, the earth lamp will light. Especially, for positive ground battery separate the frame ground of the external equipment from the earth. If not, the equipment may be damaged.

External equipment

The power supply port is commonly used for connection of external equipment such as navigation equipment or a PC. Refer to the interconnection diagram on page S-1 for connection.

6.4 Interfacing

This equipment can receive navigation data in RS-232C format. For example, it can receive position data from GPS navigator GP-31/GP-36 for display on its screen. If you want to connect equipment which outputs data in a format other than RS-232C, a level converter is required for interface. Consult FURUNO dealer for details.

Input data sentence description

GGA: GPS position fixing condition (time of fix, latitude, longitude, receiving condition, number of satellites used, DOP)

GLL: Latitude and longitude

RMB: Generic navigational information (cross track error, steering direction, starting waypoint no., destination waypoint no., latitude and longitude of starting waypoint, latitude and longitude of destination waypoint, range and bearing to waypoint, range and bearing from present position to destination waypoint, velocity to destination, arrival alarm)

ZDA: Time and date

MENU TREE

Default settings in boldface italic.

- MENU
  - STATION SELECTION
    - MODE (***AUTO***, MANUAL)
  - MESSAGE SELECTION (***A-E, L, V: RECEIVE; OTHERS: IGNORE***)
  - FUNCTIONS
    - RCV NOTIFY (***OFF***, ON)
    - RCV ALARM (OFF, ***ON***)
    - KEY BEEP (OFF, ***ON***)
    - ERROR RATE (0-39 %, ***33%***)
    - SCROLLING (***AUTO-SLOW***, AUTO-FAST, SKIP-$$)
    - SAVE MESSAGE TO PC
  - SYSTEM MENU
    - UNITS (***nm, kt***; km, km/h; mi,mi/h)
    - TIME DIFF (-13:30 - +13:30, ***+00:00***)
    - TIME DISP (12HOUR, ***24HOUR***)
    - DEFAULT SETTING
    - DELETE ALL MESSAGES
    - TEST
    - WIRING INFO?
  - USER DISPLAY
    - LARGE (SPD, CSE, RNG, PWR, ***L/L***)
    - LEFT (SPD, ***CSE***, RNG, BRG, PWR)
    - RIGHT (***SPD***, CSE, RNG, BRG, PWR)
  - LANGUAGE(***ENG***, GER, SPA, DEN, FRA, ITA, DUT, POR)

SPECIFICATIONS OF THE NAVTEX RECEIVER
NX-300

1. RECEIVER UNIT

1.1.	Receiving Frequency	518 kHz or 490 kHz
1.2.	Mode of Reception	F1B
1.3.	Sensitivity	2 µV e.m.f. (50 ohms), 4% error rate
1.4.	Message Category	A: Navigation warning
		B: Meteorological warning
		C: Ice report
		D: Search and rescue information/ piracy and armed robbery
		E: Meteorological forecast
		F: Pilot message
		G: Decca message
		H: Loran-C message
		I: Omega message
		J: Differential omega message
		K: Other electronic navigational aid and system message
		L: Navigational warning (additional)
		M to Y: Reserved – presently not used
		V: Notice to Fishermen (US only)
		Z: QRU (no message on hand)

2. DISPLAY UNIT

2.1.	Display System	4.5-inch (95 x 60 mm) Monochrome LCD, 120 x 64 pixels
2.2.	Display Modes	Message Selection Mode, NAV Data Mode,
		Message Display Mode
2.3.	Message Storage	28,000 Characters

3. ANTENNA UNIT

3.1.	Selectable Antenna	NX-3H-D: H-field antenna for NX-300-H-D
		Others: Local supply antenna for NX-300-N-D
3.2.	Input Impedance	50 ohms
3.3.	Power supply	+5.0 VDC

4. INTERFACE

4.1.	Input Data	NMEA0183 Ver.1.5/2.0, RS-232C, 4800 bps
		GGA, GLL, RMB, ZDA

4.2.	Output Data	Message data for personal computer, RS-232C, 4800 bps Data length: 8, Stop bit: 1, Parity: None T/R Code: CR+LF, XON/XOFF Control, Local echo: ON

5. POWER SUPPLY

5.1.	NX-300-D + NX-3H-D	12-24 VDC: 130-70 mA

6. ENVIRONMENTAL CONDITION

6.1.	Ambient Temperature	Antenna unit: -25°C to +70°C Display Unit: -15°C to +55°C
6.2.	Relative Humidity	95% at 40°C
6.3.	Water proofing	Antenna unit: IEC-IPX6 Display unit: IEC-IPX5
6.4.	Vibration	±1 mm ±10%, 5 to 13.2 Hz, Maximum acceleration 7 m/s^2, 13.2 to 100 Hz (IEC 60945)

7. COATING COLOR

7.1.	Display Unit	Chassis: 2.5GY5/1.5, Panel N3.0
7.2.	Antenna Unit	N9.5

PACKING LIST

08AU-X-9852 -1 1/1

NX-300-H-D

NAME	OUTLINE	DESCRIPTION/CODE No.	Q'TY
ユニット UNIT			
空中線部 ANTENNA UNIT	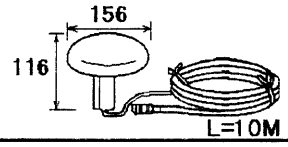	NX-3H-D 000-059-204	1
ﾅﾌﾞﾃｯｸｽ受信機 NAVTEX RECEIVER	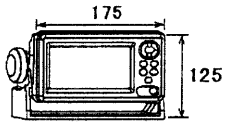	NX-300-D 000-059-205	1
予備品 SPARE PARTS			
ﾋｭｰｽﾞ FUSE	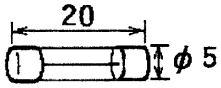	FGMB 1A 125V 000-114-805	2
工事材料 INSTALLATION MATERIALS			
ｹｰﾌﾞﾙ組品MJ CABLE ASSY.	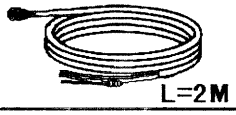	MJ-A7SPF0005-020 000-139-384	1
+ﾄﾗｽﾀｯﾋﾟﾝﾈｼﾞ +TAPPING SCREW	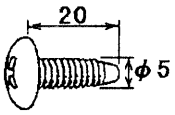	5X20 SUS304 1ｼｭ 000-802-081	4

(略図の寸法は、参考値です。 DIMENSIONS IN DRAWING FOR REFERENCE ONLY.)

DWG NO.
C5629-Z02- B

PACKING LIST

NX-300-N-D

NAME	OUTLINE	DESCRIPTION/CODE No.	Q'TY
ユニット UNIT			
ﾅﾌﾞﾃｯｸｽ受信機 NAVTEX RECEIVER	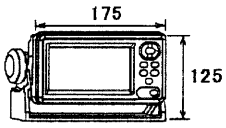	NX-300-D 000-059-205	1
予備品 SPARE PARTS			
ﾋｭｰｽﾞ FUSE	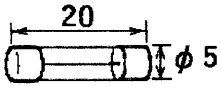	FGMB 1A 125V 000-114-805	2
工事材料 INSTALLATION MATERIALS			
ｹｰﾌﾞﾙ組品MJ CABLE ASSY.	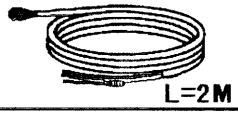	MJ-A7SPF0005-020 000-139-384	1
+ﾄﾗｽﾀｯﾋﾟﾝﾈｼﾞ +TAPPING SCREW	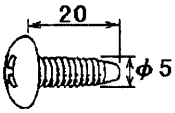	5X20 SUS304 1ｼｭ 000-802-081	4

(略図の寸法は、参考値です。 DIMENSIONS IN DRAWING FOR REFERENCE ONLY.)

DWG NO.
C5629-Z03- B

FURUNO

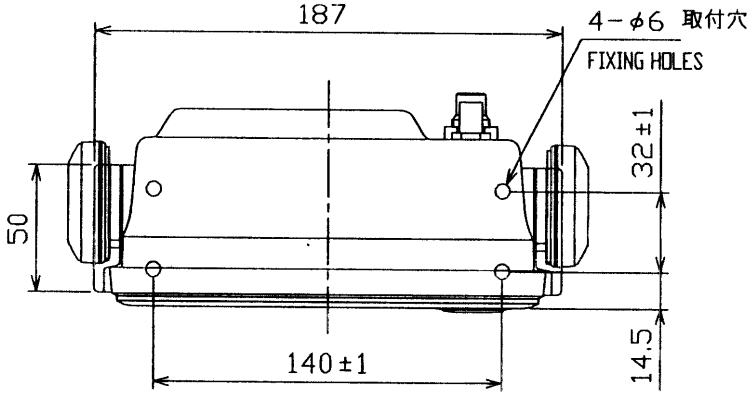

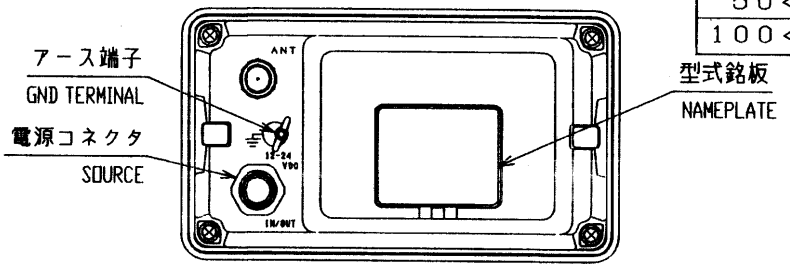

寸法区分（mm） DIMENSION	公差（mm） TOLERANCE
L≦50	±1.5
50<L≦100	±2.5
100<L≦500	±3

表 1
TABLE 1

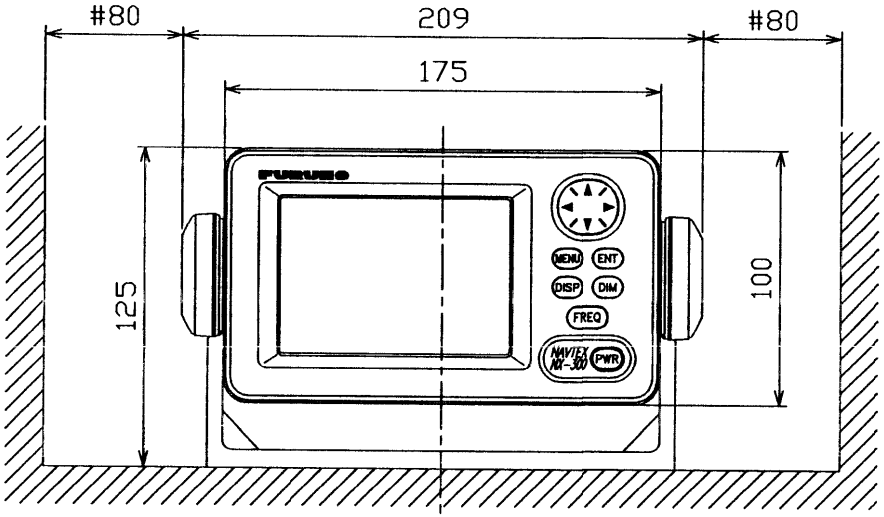

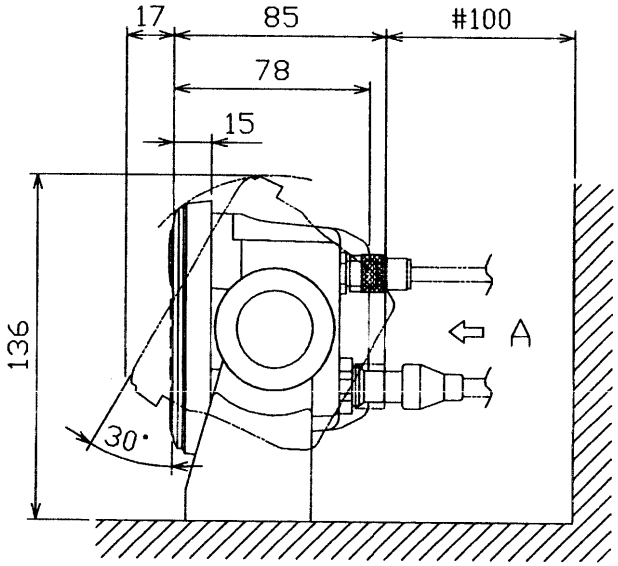

注　記　1）装備ケーブルはサービス時、本体を前方に十分引き出せるよう余裕を持たせること。
2）取付用ネジはトラスタッピングネジ呼び径５×２０を使用のこと。
3）指定外寸法公差は表１による。
4）#印寸法は最小サービス空間寸法とする。

NOTE
1. KEEP SUFFICIENT CABLE LENGTH BIHIND THE UNIT.
2. USE TAPPING SCREWS 5 x 20 FOR FIXING THE UNIT.
3. TABLE 1 INDICATES TOLERANCE OF DIMENSIONS.
4. #: RECOMMENDED SERVICE CLEARANCE.

DRAWN May 9 '01 T.YAMASAKI		TITLE	NX-300-D
CHECKED May 10 '01 Y.Kim		名称	受信機（卓上装備）
APPROVED May 10 '01 S.Yoshiura			外寸図
SCALE 1/3	MASS 0.68 ±10% kg	NAME	RECEIVER UNIT (DESKTOP MOUNT)
DWG.No. C5629-G01- B	08-021-101G-0		OUTLINE DRAWING

FURUNO ELECTRIC CO., LTD.

D-1

FURUNO

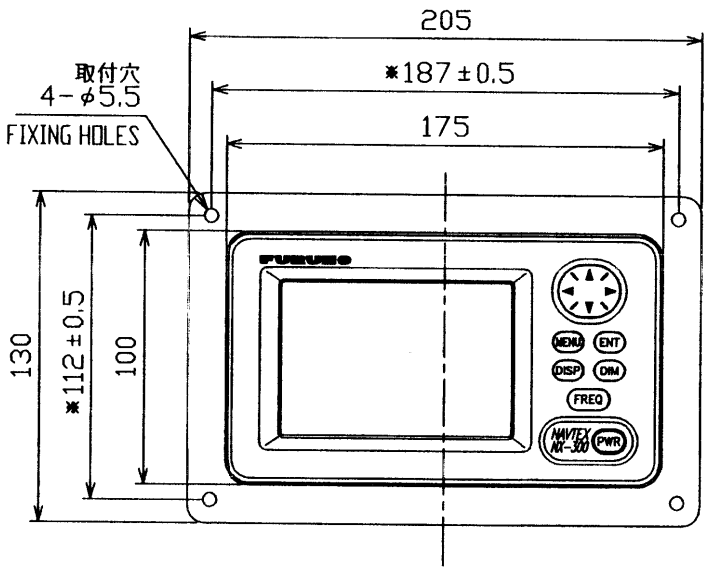

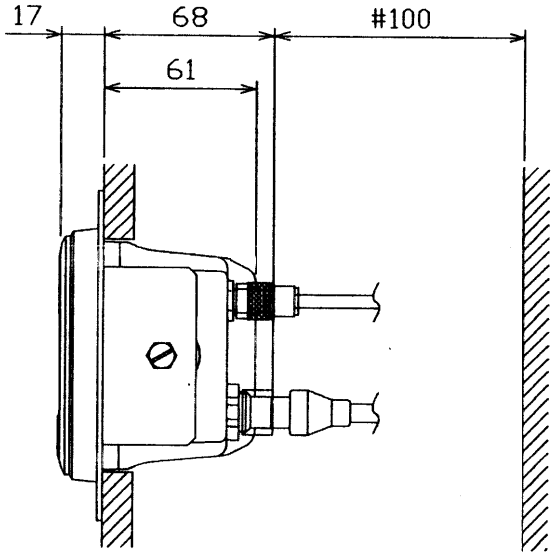

寸法区分（mm）DIMENSION	公差（mm）TOLERANCE
L≦50	±1.5
50<L≦100	±2.5
100<L≦500	±3

表 1
TABLE 1

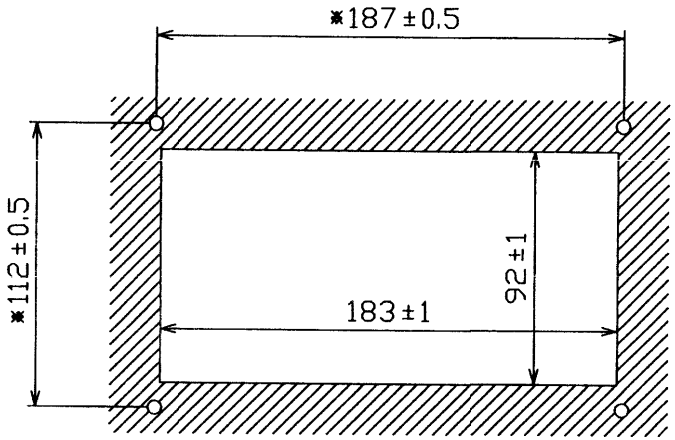

取付穴寸法図（参考図）
CUTOUT DIMENSIONS

注　記　1）　※印寸法は取付穴位置寸法とする。
2）　取付用ネジはタッピングネジ呼び径５×２０を使用のこと。
3）　指定外の寸法公差は表１による。
4）　#印寸法は最小サービス空間寸法とする。

NOTE
1. '※' INDICATES DIMENSION OF FIXING HOLES PITCH.
2. USE TAPPING SCREWS 5 x 20 FOR FIXING THE UNIT.
3. TABLE 1 INDICATES TOLERANCE OF DIMENSIONS.
4. #: RECOMMENDED SERVICE CLEARANCE.

DRAWN May 9 '01 T.YAMASAKI		TITLE NX-300-D
CHECKED May 10 '01 Y. Kimura		名　称 受信機（埋込装備F）
APPROVED May 10 '01 S. Yoshi		外寸図
SCALE 1/3 MASS 0.67 ±10% kg		NAME RECEIVER UNIT (FLUSH MOUNT F)
DWG.No. C5629-G03- B	08-021-111G-0	OUTLINE DRAWING

FURUNO ELECTRIC CO., LTD.

FURUNO

寸法区分（mm）DIMENSION	公差（mm）TOLERANCE
L≦50	±1.5
50<L≦100	±2.5
100<L≦500	±3

表 1
TABLE 1

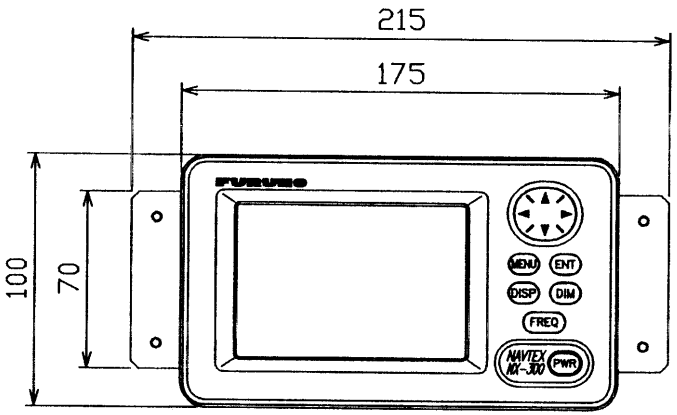

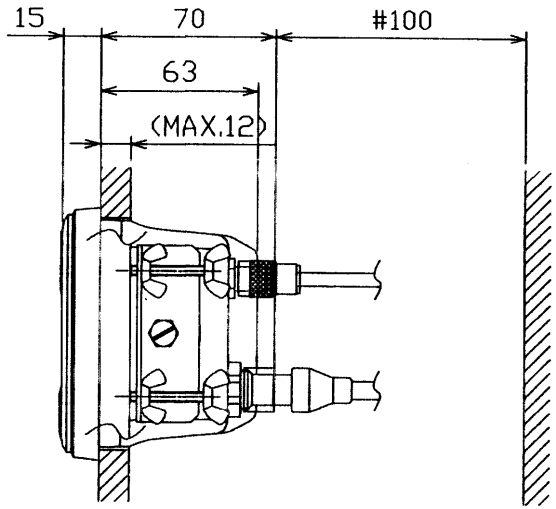

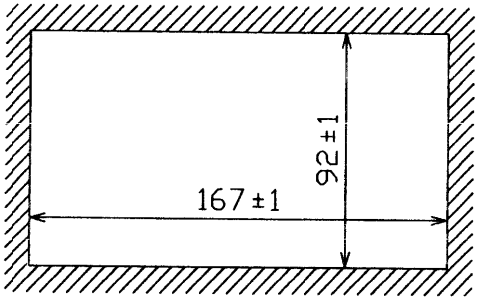

取付穴寸法図（参考図）
CUTOUT DIMENSIONS

注　記　1）　指定外の寸法公差は表1による。
　　2）　#印寸法は最小サービス空間寸法とする。

NOTE　1.　TABLE 1 INDICATES TOLERANCE OF DIMENSIONS.
　　2.　#: RECOMMENDED SERVICE CLEARANCE.

DRAWN May 9 '01 T.YAMASAKI		TITLE	NX-300-D
CHECKED May 10 '01 Y.Kh		名　称	受信機（埋込装備S）
APPROVED May 10 '01 S.Yoshi			外寸図
SCALE 1/3	MASS 0.69 ±10% kg	NAME	RECEIVER UNIT (FLUSH MOUNT S)
DWG.No. C5629-G04- B	08-021-121G-0		OUTLINE DRAWING

FURUNO ELECTRIC CO., LTD.

FURUNO

A) マストへの取付け　MAST MOUNTING

a) マスト取付金具CP20-01111(工事材料)でマストに固定する。
USE MAST MOUNTING KIT CP20-01111.

b) パイプのみを使うとき
USE A PIPE ONLY.

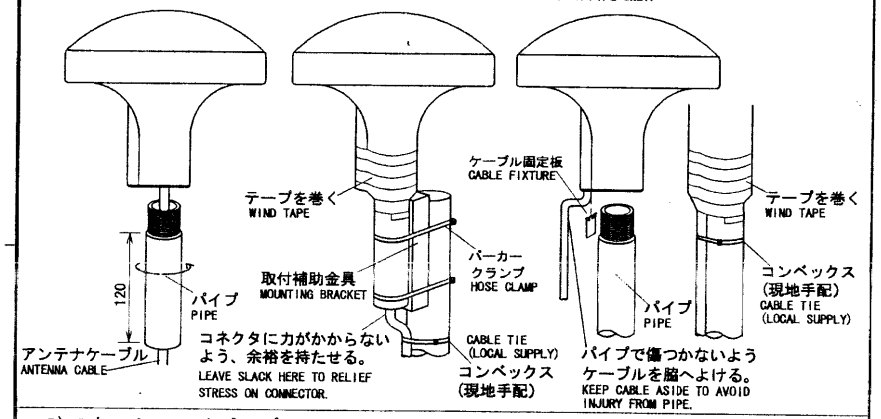

B) スタンションやパルピットにつけるとき　HANDRAIL MOUNTING

レール用アンテナベース No.13-RC5160 (取付可能レール直径：φ19～φ32)
(コード番号：000-806-114)

USE HANDRAIL MOUNTING BASE No.13-RC5160 (CODE No.000-806-114, OPTION).
THE DIAMETER OF THE HANDRAIL MAY BE FROM φ19mm TO φ32mm.

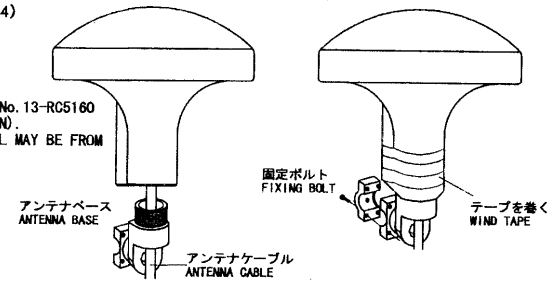

注記 1) パイプ(アンテナベース)はアンテナユニットにねじ込んだ後に固定する。
2) アンテナを固定するときはパイプ（アンテナベース）をアンテナにねじ込むこと。
アンテナ側をねじるとコネクタ部やケーブルに無理がかかり、故障の原因となる。

NOTE 1. FASTEN PIPE(ANTENNA BASE) TO ANTENNA UNIT FIRST THEN FIX THEM TO MAST OR HANDRAIL.
2. WHEN FIXING ANTENNA, TURN PIPE OR ANTENNA BASE; NOT THE ANTENNA.
TURNING THE ANTENNA MAY TWIST THE CABLE AND PLACE STRESS ON CONNECTOR.

C) 取付ける場所が傾斜しているとき　ANTENNA BASE MOUNTING

オプションのアンテナベースを使う。
USE OPTIONAL ANTENNA BASE No.13-QA330/QA310.

傾斜 INCLINATION	-5° - 33°	32° - 65°	65° - 98°
装備方法 MOUNTING METHOD	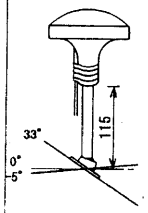	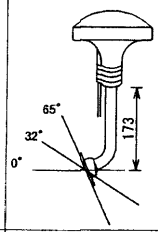	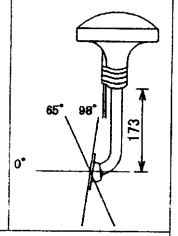
アンテナベース型式 ANTENNA BASE TYPE	直型アンテナベース RIGHT ANGLE ANTENNA BASE No. 13-QA330	L型アンテナベース L-TYPE ANTENNA BASE No. 13-QA310	
コード番号 CODE No.	000-803-239	000-803-240	

アンテナベース基部
MOUNTING DIMENSIONS OF ANTENNA BASE

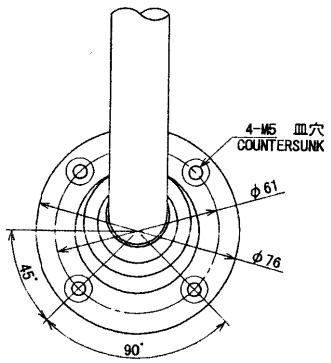

取付場所 MOUNTING LOCATION

THE FIGURE BELOW SHOWS THE RECOMMENDED SEPARATION DISTANCES FROM OTHER ANTENNAS TO AVOID MUTUAL INTERFERENCE.
他の機器のアンテナから下の図の距離以上離す。

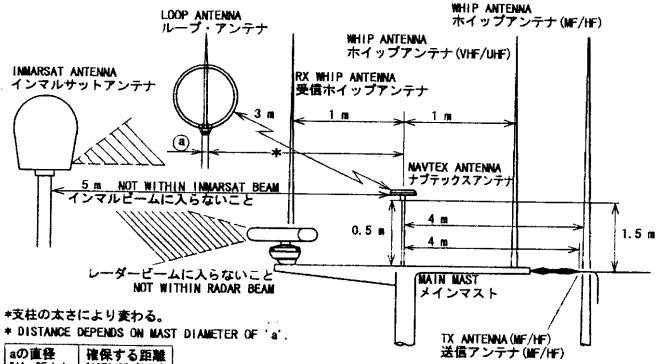

*支柱の太さにより変わる。
* DISTANCE DEPENDS ON MAST DIAMETER OF 'a'.

aの直径 DIA. OF 'a'	確保する距離 DISTANCE (MIN.)
10 cm	1.5 m
30 cm	3 m

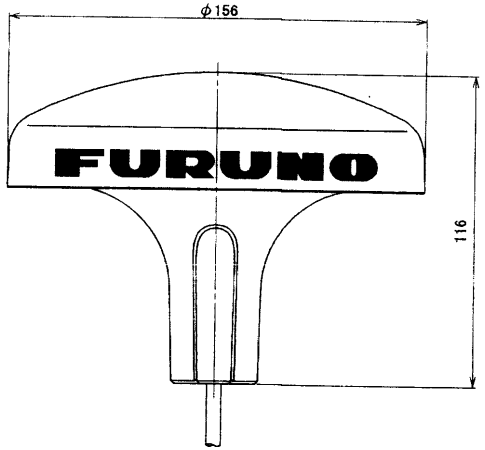

寸法区分(mm) DIMENSION	公差(mm) TOLERANCE
0 < L ≦ 50	±1.5
50 < L ≦ 100	±2.5
100 < L ≦ 500	±3

表 1　TABLE 1

1-14UNS1B
ねじ山数(25.4mmにつき)：　14
ピッチ：　1.8143 mm
オネジ有効長さ：　15.17 mm
オネジ有効径：　24.17 mm

THREAD PER 25.4mm (1 INCH): 14
PITCH: 1.8143 mm
THREAD LENGTH: 15.17 mm
PITCH DIAMETER: 24.17 mm

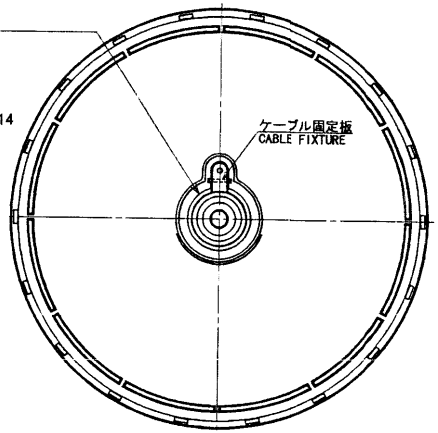

注記　1）指定なき寸法公差は表1による。

NOTE　1. TABLE 1 INDICATES TOLERANCE OF DIMENSIONS.

DRAWN May 9 '01 T. YAMASAKI			TITLE NX-3H-D
CHECKED May 12 '01 Y. Kina			名称 空中線部
APPROVED May 10 '01 S. Yoshimura	NX-300		外寸図
SCALE 1/2	MASS ±10% 0.94 kg	MASS W/ 10m CABLE. 質量は10mケーブルを含む。	NAME ANTENNA UNIT
DWG. No. C5629-G05- D	08-021-3000-G1		OUTLINE DRAWING

FURUNO ELECTRIC CO., LTD.

D-4

FURUNO

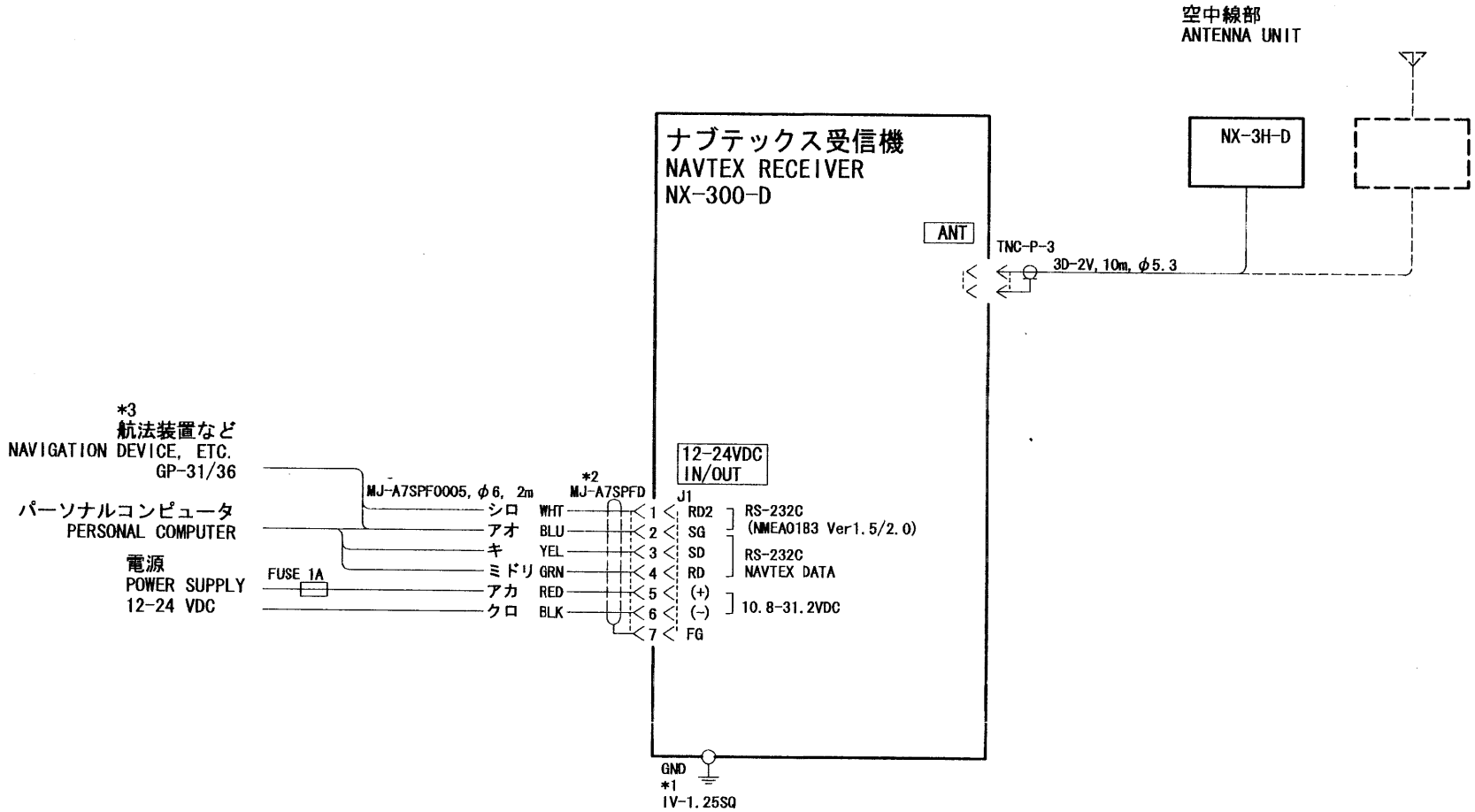

注記
＊１）現地手配。
＊２）コネクタは工場にて取付済み。
＊３）RC-232C以外のフォーマットの場合は
　　レベル変換器が必要。

NOTE
*1. LOCAL SUPPLY.
*2. CONNECTOR FITTED AT FACTORY.
*3. LEVEL CONVERTER REQUIRED FOR FORMAT OTHER THAN RS-232C.

DRAWN May. 9 '01 T. YAMASAKI			TITLE NX-300
CHECKED May 10 '01 Y. Kima			名称 ナブテックス受信機
APPROVED May 10 '01 S. Yoshimura			相互結線図
SCALE / MASS kg			NAME NAVTEX RECEIVER
DWG. No. C5629-C01- C			INTERCONNECTION DIAGRAM

FURUNO ELECTRIC CO., LTD.

S-1

INDEX

A

All clear 4-1

AUTO 1-3

AUTO mode 2-3

AUTO-FAST 2-6

AUTO-SLOW 2-6

B

BATTERY icon 1-3, 5-2

C

Contrast 2-2

Control panel 2-1

D

Data sentence 6-4

Default setting 3-3

Deleting all messages 3-4

DEMO mode 4-1

Dimmer 2-2

E

ERROR RATE 2-5

F

FUNCTIONS menu 2-5

G

Grounding 6-4

I

Installation 6-1

K

KEY BEEP 2-5

L

Language menu 2-9

LCD check 5-2

Local time 3-2

M

Main menu 2-2

Maintenance 5-1

MANUAL mode 2-3

Message selection 2-4

Mounting 6-1

N

Navarea 1-1

Navigation data display 2-11, 3-4

NAVTEX area 1-1

NEW 1-3

O

Omnipad 2-1

P

Power on/off 2-1

Program version no. 5-2

R

RCV ALARM 2-5

RCV NOTIFY 2-5

Rx 1-3

S

SAR 1-3

Saving to PC 2-6

Scroll bar 1-3

SCROLLING 2-6

SKIP-$$ 2-6

Start code 1-2

Station list 1-5

Station map 1-4

Station selection 2-3

SYSTEM MENU 3-1

T

Termination code 1-2

TEST 5-1

TIME DIFF 3-2

Time difference 3-2

TIME DISP 3-3

Type of message 1-2

U

Units of measurement 3-1

User display 3-4

V

Version no. 2-1

VIEW mode 4-1

W

WARNING 1-3

Wiring 2-6, 6-3

FURUNO ELECTRIC CO., LTD.
9-52 Ashihara-Cho, Nishinomiya City, 662-8580, Hyogo, Japan
Tel: +81 798-65-2111 Fax: +81 798-65-4200

Pub NO. DOC-320

Declaration of Conformity CE 0560

We FURUNO ELECTRIC CO., LTD.

(Manufacturer)

9-52 Ashihara-Cho, Nishinomiya City, 662-8580, Hyogo, Japan

(Address)

declare under our sole responsibility that the product

NAVTEX receiver Model NX-300 for the reception of navigational and meteorological warnings and urgent information for ships consisting of Receiver unit NX-300, E-field antenna unit NX-3E and H-field antenna unit NX-3H
(Serial No. 3519-0001)

(Model name, serial number)

is in conformity with the essential requirements as described in the Directive 1999/5/EC of the European Parliament and of the Council of 9 March 1999 on radio equipment and telecommunications terminal equipment (R&TTE Directive) and satisfies all the technical regulations applicable to the product within this Directive

EN 60945: 1997-01 (IEC 60945 Third edition: 1996-11)

(title and/or number and date of issue of the standard(s) or other normative document(s))

For assessment, see

- Statement of Opinion N° 01214017/AA/00 of 17 January 2001 issued by KTL Certification, The Netherlands
- Test report FLI 12-00-008 of 3 March 2000 prepared by Furuno Labotech International Co., Ltd.

On behalf of Furuno Electric Co., Ltd.

Hiroaki Komatsu
Manager,
International Rules and Regulations

Nishinomiya City, Japan
January 25, 2001

(Place and date of issue)

(name and signature or equivalent marking of authorized person)